PETROBRAS	TECHNICAL SPECIFICATION	N°: I-ET-3A17.01-1231-321-1J5-001	
	CLIENT: BS/ATP-IMI/OP-PMXL		SHEET: 1 of 37
	JOB: PMXL-1 SUPPLEMENTARY PROJECT		
	AREA: 1231 - PROCESSING AND HANDLING UNIT		
	TITLE: TURBOCOMPRESSOR UC-1231002		BS/PCM/PROJD
			INTERNAL

INDEX OF REVISION

REV.	DESCRIPTION AND/OR REVISED SHEETS
0	ORIGINAL ISSUE
A	REVISED WHERE INDICATED AFTER APR, HAZOP AND GRS
B	REVISED WHERE INDICATED
C	REVISED ITEM 5.1.28

	REV. 0	REV. A	REV. B	REV. C	REV. D	REV. E
DATE	10/30/25	01/12/26	02/06/26	05/06/26		
EXECUTION	ITEM 9	ITEM 9	ITEM 9	ITEM 9		
CHECK	CTFQ	CTFQ	CTFQ	CTFQ		
APPROVAL	BEGS	BEGS	BEGS	BEGS		

THE INFORMATION CONTAINED IN THIS DOCUMENT IS PETROBRAS' PROPERTY AND MAY NOT BE USED FOR PURPOSES OTHER THAN THOSE SPECIFICALLY INDICATED HEREIN. THIS FORM IS PART OF PETROBRAS' NI-381-REV.M.

INTERNA \ Força de Trabalho

TABLE OF CONTENTS

1. DEFINITIONS AND ABBREVIATIONS 3

2. GENERAL 4

3. CONSTRUCTION FEATURES 6

4. ACCESSORIES AND AUXILIARIES 7

5. AUTOMATION 18

6. ELECTRICAL 31

7. OPERATION AND MAINTENANCE REQUIREMENTS 32

8. INSPECTION AND TESTS 34

9. WORKING GROUP 36

10. ANNEXES 37

INTERNA \ Força de Trabalho

1. DEFINITIONS AND ABBREVIATIONS

1.1. DEFINITIONS

PETROBRAS: Contracting and operating company as PURCHASER.

PACKAGER: Company responsible for design, assembly, construction, fabrication, test and furnishing of main equipment and design, assembly, tests, integration and furnishing of all other equipment in the skid, including the auxiliary systems and components, even if supplied loose.

INTEGRATOR: Company hired by PETROBRAS to be responsible for project, design, assembly, erection, construction, test, lift, hook up, installation and integration of the Packages at the Platform, with complete and fully operative systems in accordance with the requirements of this specification, codes and standards referenced therein.

VENDOR: Company hired by the PACKAGER or INTEGRATOR to supply equipment, components of equipment, instruments, control systems, etc. that will be part of the main system to be supplied.

1.2. ABBREVIATIONS:

AEPR	Automation & Electrical Panels Room
AMS	Asset Management System
API	American Petroleum Institute
ASME	American Society of Mechanical Engineers
AS	Anti-surge
ASV	Anti-surge Valve
ATR	Automation and Turbomachinery Room
AVM	Anti-Vibration Mounting
BDV	Blow Down Valve
CCR	Central Control Room
CGS	Compressor Governor System
CGS_HMI	Human Machine Interface for Compressor Governor System
CSS	Control and Safety System
Cv	Coefficient flow valve
DGS	Dry Gas Seal
DIO	Optical Internal Distributor
ESD	Emergency Shutdown
FAT	Factory Acceptance Test
FGS	Fire and Gas System
FIT	Factory Integrated Test
HMI	Human Machine Interface
I/O	Input/Output
LAN	Local Area Network
MCC	Motor Control Center
MPA	Automatized Procedures Module
MPS	Machinery Protection System
MRT	Mechanical Running Test
OPC	Open Platform Communications
PAS	Package Automation System
PCS	Process Control System
PLC	Programmable Logic Controller

INTERNA \ Força de Trabalho

PMS	Power Management System
PMXL1	Mexilhão Gas Fixed Platform
PSD	Process Shutdown System
PSV	Pressure Safety Valves
PCV	Pressure Control Valves
PDCV	Pressure Differential Control Valve
P&ID	Piping and Instrument Diagram
RESD	Emergency Shutdown Relay
RFI	Radio Frequency Interference
SAT	Site Acceptance Test
SDV	Shut Down Valve
SGCS	Seal Gas Conditioning System
SGP	Seal Gas Panel
SLT	Sound Level Test
TCP/IP	Transmission Control Protocol/Internet Protocol
UCP	Unit Control Panel
UCP_HMI	Human Machine Interface for Unit Control Panel

2. GENERAL

2.1. The implementation of a compression system at PMXL-1 is intended to reduce the operating pressure in the plant's primary separation stage. This reduction in separation pressure decreases the backpressure exerted on the producing wells, thereby enhancing overall well productivity.

2.2. Figure 1 illustrates a simplified schematic of the proposed compression system.

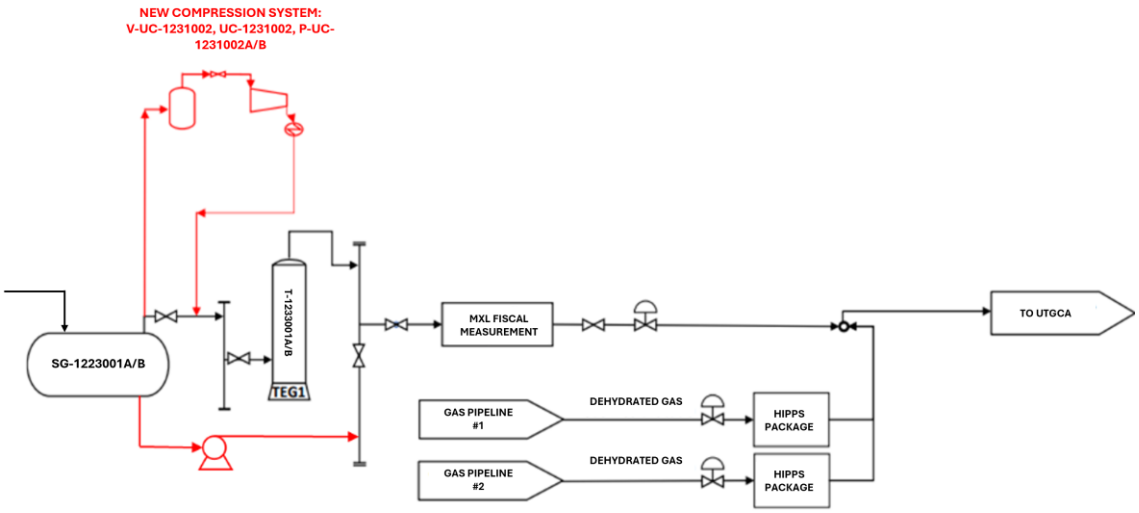

Figure 1: Simplified schematic of the proposed compression system

2.3. Centrifugal compressor shall be in accordance with API STD 617, last edition, and Annex B - Additions and Modifications to API STD 617.

2.4. Gas Turbine shall be in accordance with API STD 616, last edition.

INTERNA \ Força de Trabalho

2.5. The complete Turbocompressor package shall be designed for minimum 30 years of operation installed on the PMXL1.

2.6. All documents listed in Material Requisition are mandatory, as well as the electrical, automation and safety requirements for Natural Gas Turbocompressor package unit described in this document.

2.7. All components of the system shall be suitable for offshore environment, throughout the whole platform service life, under all operational conditions described in PETROBRAS specifications.

2.8. PACKAGER shall be entirely responsible for material selection on items not specified by PETROBRAS and shall inform material of all main parts according to ASTM code. All bolts and nuts shall be supplied with PACKAGER certificates and fully marked according to applicable ASTM standard.

2.9. All shop punch lists shall be cleared before shipment.

2.10. Equipment shall be prepared for outdoor storage according to PACKAGER specifications.

2.11. PACKAGER shall specify the products to be used for preservation of the equipment components and spare parts, their removal and reapplication methods and the application date. Such data shall be summarized on two tags to be securely fastened on all equipment and outside of each crate. If rust preventives are required, volatile products shall not be applied.

2.12. Hazardous and toxic materials associated with adverse health effects shall be avoided or minimized. PACKAGER, INTEGRATOR and VENDOR are encouraged to promote their replacement. Asbestos, hazardous and toxic components shall not be used in the materials and equipment supplied for this project or for this plant or facility. As the use of such materials will not be tolerated, PETROBRAS strongly recommends PACKAGER, INTEGRATOR and VENDOR take all necessary measures to ensure their use is fully avoided throughout this project. Material safety data sheets may be required by PETROBRAS at any time, to demonstrate that a particular material has not been, is not and will not be used throughout all stages of this project.

2.13. All equipment, components and panels shall have a nameplate easy to access, to view and read. Nameplate shall be made in stainless steel AISI 316L and bolted (with stainless steel elements) to the equipment. Layout drawings shall be submitted to PETROBRAS approval. Nameplates shall contain the following information, in Brazilian Portuguese language:

- Client name;
- Client job;
- Client area;
- Supplier name;
- Series number and model;
- Year of manufacturing;
- Main design and test data: pressure, temperature, voltage, rotation, etc;
- Specific data;
- Tag number;
- PETROBRAS requisition number (RM);
- PETROBRAS request for quotation (RFO);

INTERNA \ Força de Trabalho

- PETROBRAS order number (PO);
- Empty weight;
- Design code.

2.14. All safety signals shall be in Portuguese language.

2.15. PACKAGER shall consider the available utilities indicated in I-RL-3A17.01-1200-940-1J5-001 - GENERAL SPECIFICATION FOR AVAILABLE UTILITIES in the design of equipment, accessories and auxiliaries.

2.16. The maximum backpressure of the Unit's Vent System is 250 kPa. This value shall be considered during the equipment design process, including depressurization and primary seal venting.

3. CONSTRUCTION FEATURES

3.1. The gas turbine shall be mono fuel configuration. The gas turbine shall be supplied with a complete protective bag and in the transportation stand.

3.2. For continuous running duty basis, the gas turbine shall be capable of driving gas compressor at site rated conditions, including all typical losses (mechanical, auxiliaries, inlet and exhaust losses, ageing and fouling) at the end of the life cycle. Site rated conditions for the gas turbine performance design shall be considered as 30ºC ambient temperature, sea level and offshore tropical environment (80% relative humidity).

3.3. Turbocompressor to be installed in a classified area. The Area Classification Drawing DE-3A17.01-5400-94A-1J5-001 shall be used as a reference, this document will be updated during the Detailed Design phase to include the new equipment outlines. All mechanical equipment shall be certified for explosive atmospheres according to ISO 80079-36 and ISO 80079-37. Unless otherwise informed, ambient temperature: 14ºC minimum/25ºC mean/35ºC maximum.

3.4. The Mean Time Between Overhauls (MTBO) shall be, at least, 24000 equivalent operating hours (EHO) on gas fuel. No major parts disassembly will be accepted for inspection or replacement before the referred period of continuous operation. No components with service life lower than 24000 EHO will be accepted.

3.5. Gas Turbine ignition system shall not have radioactive components.

3.6. Gas turbine design shall enable borescope inspection of hot gas path and blading, fitted with dedicated plugged holes at the combustion chambers, transition pieces, first and last stage of air compressor, gas generator and power turbine.

3.7. Centrifugal compressor shall be radially split case (barrel type) in accordance with API std 617 last edition.

3.8. Compressor and gearbox bearings shall be hydrodynamic tilting pads type.

INTERNA \ Força de Trabalho

3.9. All bearings shall be designed to minimize oil foaming and prevent oil whirl at any operating speed.

3.10. Connections between pipe flanges and suction and discharge nozzle flanges of compressor shall be provided with removable spools to facilitate compressor removal and disassembly. Removable spools shall not have any process instruments. The removable spool shall have borescope accesses (suction and discharge), closer to the compressor flanges. These access with blind flange connections shall be quick and easy to open and close.

3.11. Clamp connections are not acceptable.

3.12. PACKAGER shall consider the presence of free water and corrosive agents (H_2S and CO_2) even when not specified of all compressor operating cases, and its corrosive contents. PACKAGER shall also consider, in addition to steady state operation, the transient conditions during compression system starts and stops; plant pressurization; stopping compressor and depressurizing plant; compressor stopping and plant depressurizing, compressor stopped, and plant pressurized. The minimum values of 5% (vol.) of CO2 or partial pressure of CO2 above 4 psi-abs (Temperature <60º C and 5m/s < speed < 10m/s) and 170 ppmv of H2S shall be taken as a basis).

3.13. All materials that are exposed to hydrocarbons containing hydrogen sulfide must follow the requirements of ISO 15156 for sour service.

3.14. Area shall be provided for removal of the compressor bundle.

3.15. INTEGRATOR shall guarantee air for seal and cooling systems to gas turbine during black shutdown. Complete high-pressure air or nitrogen storage system including intensifier is acceptable by means to be defined by INTEGRATOR (air or nitrogen bottles or pressure vessel).

3.16. Fugitive emissions from potential leakage points in the equipment, accessories, and auxiliaries (including valves, instruments, seals) consuming process gas shall be minimized. Valves shall comply with ISO 15848-1 for fugitive emissions control.

4. ACCESSORIES AND AUXILIARIES

4.1. Piping

4.1.1. Except where indicated, all piping and accessories within the equipment package limit shall be in accordance with PACKAGER piping specification and international standards. Nevertheless, PACKAGER shall submit its Piping Spec in advance to be approved by PURCHASER. No wafer type valve is allowed to be used on inflammable fluid service.

4.1.2. All auxiliary piping requiring field connections shall be brought to the skid edge and shall be flanged.

4.1.3. Manual block valves and spectacle/blind flanges shall be provided at all battery limits such as inlet and outlet nozzles, drain lines, etc. PACKAGER and INTEGRATOR to consider piping standards as in I-ET-3000.00-1200-200-P4X-001 – PIPING MATERIALS SPECIFICATION FOR E&P PRODUCTION FACILITIES. Manual valves shall be installed at the skid edge to be operated,

INTERNA \ Força de Trabalho

especially valves for draining the compressor casing. Free access to all manual valves shall be guaranteed.

4.1.4. All equipment shall have sufficient flexibility in all pipe and duct connections.

4.1.5. The interconnecting pipework between process and utilities plants, as well as auxiliary skid, if any, and the main skid shall be provided by INTEGRATOR. The interconnections between the gas lines shall be routed above the skids. The pipes arrangement shall avoid the accumulation of liquid (siphon). Drainage shall occur in all lower parts of the piping.

4.1.6. A T-type strainer shall be installed in each compressor suction line, positioned as close as possible to the nozzle. The strainer shall be designed for easy removal and maintenance without requiring disassembly of the piping. After commissioning, the strainer shall remain in place, with the commissioning mesh removed. A differential pressure transmitter, to be supplied by the INTEGRATOR, shall be installed and integrated with the PACKAGER's control system to protect the strainer against collapse.

4.1.7. In case of water gas content, an analysis shall be made to verify the possibility of hydrate formation in the recycling line. Hot bypass shall be avoided.

4.2. Couplings and coupling guards

4.2.1. PACKAGER is responsible for all couplings within the package, including those for auxiliary equipment.

4.2.2. Coupling for main equipment shall be a stainless-steel flexible-element, non-lubricated type.

4.2.3. PACKAGER shall submit to PETROBRAS the main equipment coupling data sheet according to API 671 latest Edition.

4.2.4. All coupling guards (including those for auxiliary equipment) shall be rigid, fully enclosed, in non-sparking material and solely fitted to equipment baseplates, not fastened. Safety coupling guards (without feet) are also acceptable. In case of failure, guards shall be able to retain broken parts, for personnel protection (OHSA 1910.219). Coupling guards shall be designed to allow removal without disassembling the coupling and shall be constructed so that routine inspections are performed by means of strobe light, with the equipment running.

4.2.5. Coupling guard drains shall have sight glasses in horizontal drain lines. The coupling guard shall not be used as a normal operating lube oil drain path.

4.3. Baseplate

4.3.1. Main baseplate shall be capable of supporting the stresses arising from platform motions and shall be provided with three (3) point supports and Anti-Vibration Mounting (AVM).

4.3.2. Baseplate shall be rigid enough to avoid permanent distortion during lifting, shipment and operation. When the baseplate is lifted, with all equipment mounted, beam deflection shall not exceed L/400 (L is the total baseplate length).

4.3.3. Driver, driven machine, transmission, oil system, seal panel and local panel shall be mounted on a single baseplate including auxiliaries. PACKAGER shall submit layout to PETROBRAS comments and approval.

4.3.4. Baseplate shall be provided with nonskid decking covering all walking and work areas. Solid decking plate shall be removable where required for maintenance.

4.3.5. All furnished skids shall be sufficiently stiff to withstand all vibration loads induced by the equipment and transfer them to the deck beams.

INTERNA \ Força de Trabalho

4.3.6. No equipment/component shall protrude beyond the skid limits. In cases where it cannot be avoided, required protection against mechanical damage shall be provided.

4.3.7. Each skid shall be provided with facilities (pad-eyes, lugs, bollards and spreader bar) for lifting, having suitable access for rigging. The estimated lifting load and safety factor for each point shall be informed in PACKAGER proposal. Main lifting points shall not be welded to the beam flange, unless the strength level is low enough or if the beam flange has a suitable thickness.

4.3.8. All equipment to be mounted on skids shall allow on-field leveling and alignment using jacking screws (in both plane directions) and precision type shims. Total shim thickness shall not exceed 6.35mm and the number of shims shall be kept to a minimum. Any additional height shall be made up of solid stainless-steel plate.

4.3.9. All skid mounted equipment containing liquids that shall be drained onto the skid area, shall be fitted with drip pan underneath the equipment and provided with flanged nozzle with sufficient slope. Drip pans draining system shall be designed considering the total deluge flow over the skid. Drain nozzles arrangements shall be provided at the skid edge with appropriate piping, blocking valve, strainer and water seal, to perform drainage.

4.3.10. Fasteners (including washers) and shims shall be constructed in stainless steel AISI 316L.

4.4. Support system

4.4.1. All required supporting systems (including spring supports, structure, etc.) shall be supplied (for on-skid elements) or specified with all design requirements (such as loads, position, forces, etc.) by PACKAGER and INTEGRATOR.

4.5. Insulation

4.5.1. All required insulation for personnel protection or machine thermal efficiency shall be applied and provided by PACKAGER and INTEGRATOR.

4.5.2. Insulation shall ensure a temperature below 60^0C over the external surface for personnel protection.

4.5.3. To prevent corrosion under insulation, only non-hygroscopic insulation material shall be used.

4.5.4. To avoid damage during transportation and erection, insulation shall be carried out after final installation.

4.6. Oil system

4.6.1. The synthetic lube oil system shall be designed per API 614 for special purpose applications (latest edition) to supply lube oil and control oil to gas generator (if applicable).

4.6.2. The mineral lube oil system shall be designed per API 614 for special purpose applications (latest edition), to supply lubricating oil to the power turbine (if applicable), gearbox and driven equipment.

4.6.3. The oil systems shall be installed on the main baseplate. Special considerations shall be given to guarantee bearing lube and its oil drainage during normal operation and post-lube (coast-down and cool-down).

4.6.4. Special consideration shall be given to the presence of dirt, debris and any foreign matter in sensitive parts (bearings, for instance). Provisions shall be made for bypass of sensitive parts while system flushing operations are performed.

4.6.5. PACKAGER shall propose its standard oil system configuration, but the configuration of the coolers and filters shall be like Oil System Data Sheet.

INTERNA \ Força de Trabalho

4.6.6. Lube oil system shall be monitored with PACKAGER specification, international standards for this system and Oil System Data Sheet.

4.6.7. PACKAGER shall provide sampling points for oil analysis at reservoir, supply manifold and oil return line of each equipment. Sampling facilities shall be permanent, fitted with valves installed in T-type connections, oil spill and drip collectors and spillback lines to be routed back to oil reservoir. Sampling arrangements shall enable samples taken during operation.

4.6.8. All piping, tubing, wet metallic parts and appurtenance including lube oil and control oil systems shall be in stainless steel AISI 316L.

4.6.9. Socket welds for piping and tubing are prohibited.

4.6.10. Reservoirs:

- Reservoir shall be provided with filling connections (with filter), level indicator sight glass, antifoaming devices, accessible manholes, valve drain at skid edge and include provisions for nitrogen purges;
- All return lines shall be top entry type, extending inlet duct inside the reservoir to below minimum operating level in order to avoid foaming;
- Reservoir shall be designed to facilitate air separation between the bearing return and pump supply;
- Vents shall be fitted with oil vapor separator to recover oil due to evaporation losses and environmental protection (PACKAGER shall guarantee maximal oil losses of five (5) ppm). Vents shall be dimensioned with the same size as the oil return header, at least.
- An electric lube oil heater shall be provided, interlocked with low-level and oil temperature control. This device should be designed to allow removal without having to drain the reservoir or stop the equipment.

4.6.11. The expected configuration pumps are:

- Main oil pump: Shaft-driven (preferable) or electric motor driven (AC power);
- Stand-by pump: Electric motor driven (AC power);
- Main and stand-by pumps shall have the same capacity;
- If the main pump is electrically driven, then main and stand-by pumps shall be identical.

4.6.12. The lube-oil coolers shall be of the air-cooled type, fabricated in stainless steel 316L and arranged in a 2 × 100% configuration with on-line changeover capability. The fan motors shall be suitable for installation in classified areas. The cooler shall be equipped with vibration switch and direct drive (preferable) or high-torque type positive-drive belt transmission. The design, fabrication, testing, and supply of these units shall comply with the latest editions of API STD 614 and API STD 661.

4.6.13. Oil filters shall be duplex (twin) with changeover valve. The canisters, transfer valves and piping for oil filter system shall be stainless steel AISI 316L construction. Filter element materials shall be corrosion and water resistant. There shall be no bypass around any filter.

4.6.14. Lube oil system shall have rundown tank for emergency conditions. The rundown tank shall have enough capacity for bearing cooling during coast-down time and cool-down time.

4.6.15. DC pump (125Vdc) is an acceptable alternative only for cool-down time, since all accessories and auxiliaries (including accumulator batteries and batteries chargers) are provided by PACKAGER. Accumulator's batteries and batteries chargers shall be optimized for entire system and shall have full redundancy. Batteries voltage (analog signal 4-20mA) and battery bank undervoltage alarm (hardwired signal) shall be available on UCP_HMI. In addition to the DC pump test during the starting sequence, periodic testing must be carried out automatically during the operation of the set, triggering an alarm in the event of pump malfunction.

4.6.16. PACKAGER shall inform all data and characteristics of electric load (as power, source, etc.) for each pump driver, heater, etc. in proposal phase. INTEGRATOR will furnish electrical utilities

INTERNA \ Força de Trabalho

required by PACKAGER, considering platform available voltages as stated in I-ET-3926.01-5140-700-PPC-003 - GENERAL ELECTRICAL REQUIREMENTS FOR PACKAGES FOR OFFSHORE UNITS and I-ET-3A17.01-5140-700-PPC-003 - ELECTRICAL REQUIREMENTS FOR PACKAGES.

4.6.17. Data sheets for pumps and heat exchangers shall be included in proposal.

4.6.18. All oil vents shall be interconnected, fitted with flame arrestors and routed to a safe area. All oil drains shall also be interconnected and routed to oil reservoir. Flame arrestor material shall be compatible with vent line material.

4.6.19. PACKAGER shall provide all data of oil system equipment and fluid as oil consumption, oil complete specification and filter elements life.

4.7. Gearbox

4.7.1. If required, the gearbox shall be double helical, single stage designed in accordance with API613 last edition. Device shall be included to allow manual rotation of the shafts for maintenance purposes (such as shaft mechanical alignment or borescope inspection).

4.7.2. The use of gearbox shall be defined by PACKAGER. However, dimension limitations for compressor package defined on Material Requisition must be accomplished.

4.7.3. Shaft oil seals shall be easily accessible for removal and re-installation without removing couplings.

4.7.4. All bearings shall be pressure lubricated and fully replaceable at field.

4.8. Pressure vessels

4.8.1. For nozzles less than 2” in nominal diameter, forged steel couplings may be used. Couplings shall be at least class 6000#, for socket weld.

4.8.2. All nozzles having a nominal diameter of 2” or greater, shall be flanged, except when specified for butt weld in the piping.

4.8.3. The minimum nominal diameter of nozzles intended for any purpose shall be 3/4”.

4.8.4. Only full penetration welds are permitted.

4.8.5. All shell reinforcements, integral or not, shall always have the same shell P- number.

4.8.6. The minimum degree of radiographic examination for weld inspections according to table UW-12 shall be full or spot.

4.9. Enclosure

4.9.1. Each gas turbine shall have its own enclosure and shall be stainless steel AISI 316L.

4.9.2. Enclosure shall consist of removable panels and doors supported on a heavy-duty frame. The enclosure shall be fabricated and bolted so that it can be completely disassembled. Roof sections shall also be removable.

4.9.3. Enclosure shall be weather-tight.

4.9.4. Joints between panels, skid, floor, piping, ducts, cabling and shaft penetrations shall be properly sealed to prevent noise propagation and ventilation problems and properly sealed for safety according to PETROBRAS requirements.

INTERNA \ Força de Trabalho

4.9.5. Enclosure shall be provided with wide full-opening side doors to allow adequate maintenance access, assembly and disassembly of all parts of the equipment, including the replacement of the complete gas generator and/or power turbine. Hinges shall be strong enough to withstand constant use and wear.

4.9.6. Enclosure doors shall be fitted with lockable handles and, in service, these doors shall be kept locked. Enclosures shall be fitted with open door alarm devices. PACKAGER shall provide anti-panic catches in order to open the doors anytime from inside. Door locations shall be clearly marked, both inside and outside the enclosure.

4.9.7. Access doors shall be fitted with viewing windows.

4.9.8. Enclosure shall be provided with internal lighting adequate for inspection and maintenance in any area in the enclosure.

4.9.9. PACKAGER shall provide electrically driven lifting/handling devices and internal structure components enabling assembly, disassembly and removal of all components inside the enclosure with adequate and certified capacity to handle maximum maintenance weight and/or dimensions.

4.9.10. Ventilation system shall have at least:

- PACKAGER shall propose their standard ventilation system configuration and inform all data and characteristics of electric load (as power, source, etc.) for each fan driver. INTEGRATOR will furnish all electrical utilities required by PACKAGER, considering platform available voltages as defined in I-ET-3926.01-5140-700-PPC-003 - GENERAL ELECTRICAL REQUIREMENTS FOR PACKAGES FOR OFFSHORE UNITS.
- PACKAGER shall be responsible for furnishing the complete enclosure ventilation system, proper for area specification, including all ducts, inertial type vane separator (inlets), coalescent filter (inlets), fire dampers (inlets and outlets), fans, drivers and actuators.
- The enclosure ventilation shall be positive pressure type.
- At least two full-capacity (2x100%) ventilation fans shall be provided for the gas turbine enclosure. DC motors shall not be used.
- During ESD event, the ventilation fan and auxiliary electrical loads shall be supplied by essential AC power.
- Fan must be sized to keep the inside enclosure temperature lower than 60°C. Higher temperatures may be accepted as long as PACKAGER guarantees safety conditions for all equipment features proven by certificates.
- The air shall be filtered before reaching the fans and the enclosure. The filter of the ventilation air system shall be independent of the filter of the combustion air system. The ventilation air must not be bled from the combustion air system filter.
- The necessary airflow rate shall be calculated and informed by PACKAGER according to international standards.
- The control of the ventilation system shall be included on the unit control panel.

4.9.11. Fire and gas detection and high-pressure water mist fire extinguishing systems (mandatory) shall be designed in accordance with NFPA 750, IMO-SOLAS and I-ET-3010.00-5420-300-P4X-001 – FIRE PROTECTION FOR MACHINERY HOODS. The systems shall be provided completely with audible and visual warning indicators. Water make-up provision and back-up nitrogen bottles shall be supplied. The selection of main or back up nitrogen bottles can be carried out by manual valves.

4.9.12. No enclosure is required for gearbox and compressor if the required minimum noise level is achieved.

4.9.13. Enclosure material, bolts, fasteners, nuts, door hinges, locks, latches and ventilation system shall be stainless steel AISI 316L.

4.10. Starting system

INTERNA \ Força de Trabalho

4.10.1. The starting system shall be capable of three starts within a one-hour period, at least. PACKAGER should inform the maximum allowable number of starts per hour and the minimum interval between two consecutive starts.

4.10.2. Gas turbine starting system shall be carried out by means of an electric or electric-hydraulic motor.

4.10.3. Driver torque, power, inertia, maximum speed and all starting system requirements and control methods (including acceleration curves, temperature limits, etc.) shall be submitted during the proposal phase.

4.10.4. For electro-hydraulic system, hydraulic parts may be mounted on a small skid immediately adjacent to the baseplate. For electric motors, all systems shall be placed inside the main baseplate. For electric motor and electro-hydraulic system, PACKAGER shall supply electronic soft starter or variable speed drive (VSD) to control of voltage drop and shall comply with I-ET-3010.00-5140-772-P4X-002 – SPECIFICATION FOR LOW VOLTAGE FREQUENCY CONVERTERS, SOFT-STARTERS AND INVERTERS FOR OFFSHORE UNITS.

4.10.5. The starting system shall be automatic and controlled from the unit control panel.

4.10.6. The starting system design shall allow occasional rotation of turbine after shutdown or when not in operation for sustained periods.

4.10.7. The starting sequence shall include sufficient cranking time to purge the exhaust duct system according to API 616.

4.10.8. The starting system shall be able to support off-line cleaning procedure.

4.10.9. In case an ignitor transformer is necessary, it shall comply with I-ET-3010.00-5140-700-P4X-002 - SPECIFICATION FOR ELECTRICAL MATERIAL AND EQUIPMENT FOR OFFSHORE UNITS, and PACKAGER shall provide this equipment.

4.10.10. The gas turbine shall be capable of immediately restarting at any time after a shutdown event. Forced lockout time is not acceptable. If necessary to adopt an electrical motoring motor to the gas generator, it shall be in 125 Vdc. All accessories and auxiliaries (including accumulator batteries and batteries chargers) shall be provided by PACKAGER. Accumulator batteries and batteries chargers shall be optimized for entire system and shall have full redundancy for more information, refer to I-DE-3926.01-5265-946-PPC-001 - UPS AND DC SYSTEMS DIAGRAM.

4.11. Fuel system

4.11.1. The fuel system should include all necessary equipment, instruments and controls for a complete, safe and operable system. (Rev. A)

4.11.2. PACKAGER shall confirm acceptance of fuel specified by PETROBRAS and clearly state any deviation from specifications and its consequences during the proposal phase, indicating the maximum and minimum variation in each characteristic and/or component.

4.11.3. Cancelled. (Rev. A)

4.11.4. Control system shall automatically purge trapped fuel gas to assure minimum allowable temperature and free moisture before starting.

4.11.5. Cancelled. (Rev. A)

4.11.6. The fuel gas system shall have at least:

- A fuel gas coalescer filter (duplex) with flow transfer valves, PSVs, level, pressure and differential pressure transmitters and automatic liquid draining.

INTERNA \ Força de Trabalho

- SDV (Shut Down Valve), BDV (Blow Down Valve) and draining valves outside the enclosure shall isolate the skid from fuel gas and condensate during fire shutdown.
- A fuel strainer upstream the connection point at enclosure. Gas filter shall be selected for maximum service life;
- Inside enclosure, a warmup vent valve, two shutoff valves, a inter shutoffs vent valve, a fuel control valve and all piping and appurtenances required by international standards and/or PACKAGER experience; (Rev. A)
- All piping and components for fuel gas shall be 316L stainless steel;
- In case of improper opening of the BDV or of the inter-shutoffs vent valve during operation with fuel gas, the system must be stopped.

4.11.7. Control system shall automatically purge trapped fuel gas to assure minimum allowable temperature and free moisture before starting.

4.11.8. All fuel system equipment shall be located near the turbine enclosure.

4.12. Gas turbine cleaning system

4.12.1. PACKAGER shall provide one combined on-line/off-line gas turbine cleaning system with mobile wash water trolley provided with lifting facilities, wheels and brakes. The cartwheels shall have a proper locking device for safety parking during operation.

4.12.2. Equipment shall include a pressurized reservoir with filling, venting and drain connections.

4.12.3. Requirements for detergent, demineralized water and other utilities (if applicable) shall be specified by PACKAGER and submitted to PETROBRAS.

4.12.4. PACKAGER shall inform which parameters are used to define the interval (fired hours) between cleaning operations.

4.12.5. All necessary equipment for a complete, safe and operable cleaning system shall be provided as PACKAGER standard.

4.12.6. PACKAGER shall furnish hoses shipped loose, in accordance with information about distances between cartwheel and gas turbine inlet points. INTEGRATOR shall provide demineralized water and other utilities (if applicable) inside of the module.

4.12.7. All parts in contact with water shall be in 316L stainless steel, including hose connections.

4.13. Combustion air inlet system

4.13.1. The Air Intake System shall be Low Velocity Combustion Air Inlet System (equal or less than 3,0 m/s) with steps of filtration arranged in a proper sequence of static filter elements. Hight velocity air filter is not acceptable.

4.13.2. Combustion air inlet system shall include, at least: rain protection with trash screen, weather protection louvers, inertial separator, coalescer/pre-filter Class M6, filter elements Class F9 and higher efficiency filter elements Class E12, air intake silencer, acoustic insulation, all duct sections, support structure, all required mounting parts, plenum chamber and expansion joint and internal AC lighting, complete with lighting switch certified for hazardous. Total pressure drop of combustion air inlet system shall not exceed 680Pa considering filter elements clean. Differential pressure monitoring on each and overall stages on control panel.

4.13.3. The air filter system must have high efficiency to remove inlet saltwater droplets and filter dry particles from the air stream. It should be designed to cover all operating conditions.

4.13.4. The configuration of air filter system shall be at least:

INTERNA \ Força de Trabalho

- The zero stage shall be rain protection with a trash screen.
- The first stage shall be a weather protection louver, a kind of wall or inertial separators like vertical vanes, with saltwater drainage collector and sloped rainwater. It shall in stainless steel AISI 316L.
- The second stage filter shall be a coalescer and pre-filter pocket type. The pockets shall be self-supporting, welded and foam-sealed. Class M6 according to ISO 16890/PM1 (EN 779:2012), dimensions 592 x 592 x 640 mm. The filter support racks shall be in stainless steel AISI 316L and fitted with anti-leaks gasket, moisture-resistant up to 100% relative humidity.
- The third stage shall be a fine dust high efficiency filter element, Class F9 according to ISO 16890/PM1 (EN 779:2012), dimensions 592 x 592 x 292 mm. The filter support racks shall be in stainless steel AISI 316L and fitted with anti-leaks gasket, moisture-resistant up to 100% relative humidity.
- The fourth stage shall be a kind of EPA - High-Efficiency Air Filters, Class E12 according to EN 1822:2009, dimensions 592 x 592 x 292 mm. The filter support racks shall be in stainless steel AISI 316L and fitted with anti-leaks gasket, moisture-resistant up to 100% relative humidity.

4.13.5. Threaded fastenings shall be wired locked. All components downstream of the last filter shall be constructed with continuous welding and designed to withstand all forces generated at the maximum allowable air intake.

4.13.6. All inlet air system components shall be in stainless steel AISI 316L. Rigid points reinforced to be provided on the house for mounting on PMXL-1 structure.

4.13.7. A door and internal ladders shall be provided for easy and safe personnel access to the gas turbine inlet plenum for maintenance procedures, visual inspection and cleaning.

4.14. Combustion gas exhaust system

4.14.1. Exhaust shall be oriented vertically upwards including exhaust diffuser, transition piece, expansion joint and silencer. Rigid points reinforced to be provided on the silencer for mounting on PMXL-1 structure.

4.14.2. The height of the vertical stack must be confirmed/updated later in the Detailed Design. However, its height cannot be less than the maximum height of the adjacent modules.

4.14.3. The exhaust system shall be fitted with all necessary pressure and temperature transmitters, vent and drain valves as required by PETROBRAS and according to PACKAGER experience.

4.14.4. The exhaust silencer shall also incorporate lifting provisions.

4.14.5. Construction materials: AISI 409 or 321L steel for silencer hot gas path.

4.14.6. Casing/ducting per manufacturer standard. All expansion joint support shall be in stainless steel AISI 316L.

4.14.7. Special attention must be paid to materials selected for high temperature work to avoid intergranular corrosion.

4.15. Dry Gas Seal (DGS) system

4.15.1. All dry gas seal system and components shall be provided by the DGS manufacturer in accordance with API 692 (latest edition), considering all operating conditions (including pressurizing start-up, normal and emergency shutdown, in settling out, etc.) and site available utilities.

INTERNA \ Força de Trabalho

4.15.2. The seal gas supply shall be available before starting compressor package pressurization and continue to operate as long as the pressure in the process plant is greater than 0.3 barg.

4.15.3. PACKAGER shall furnish all technical details about DGS system during the proposal phase, including seal leakage detection method.

4.15.4. PACKAGER shall present a reference list showing his experience with the proposed DGS system, highlighting the units with similar services.

4.15.5. DGS system shall assure that the seal gas pressure is positive in relation to the balance line pressure and also a minimum seal gas flow across the final labyrinths to avoid seal contamination for all conditions such as pressurizing, starting, operating, normal stop, emergency shutdown, pressurized stopped and during depressurization.

4.15.6. DGS shall be bi-directional tandem type for each shaft end. Primary and secondary seals rotating faces material shall be made of silicon carbide, at least. The conditioned discharge process gas shall be used as primary seal gas.

4.15.7. Conditioned nitrogen shall be used as separation gas supply. Separation seals type selection shall minimize nitrogen consumption in running and stop conditions. Available nitrogen flow rate shall be consulted prior to separation seal type selection, and if possible, carbon ring non-contacting is the preferred separation seal type. Labyrinth seal for separation seal type shall not be acceptable.

4.15.8. All DGS including piping, pressure safety valves (PSV), pressure control valves (PCV), check valves, orifice plates, and the other devices (including internals valves components) shall be made from stainless steel AISI 316L and shall be supplied by PACKAGER.

4.15.9. PACKAGER shall provide a dedicated Seal Gas Panel (SGP) for each compressor casing.

4.15.10. All PSV and check valves on venting piping, downstream each seal, control valves and other necessary valves for the DGS system shall be provided by PACKAGER. PSV, or rupture disk, shall be sized to assure venting capacity during a seal failure and minimize potential damage and uncontrolled leakage to the atmosphere. PACKAGER shall conduct a Vent Study according to Annex A of API 692 Part I to demonstrate venting capacity.

4.15.11. All lines connected to the vent system shall be capable of isolating for maintenance of equipment/accessories by means of an isolation valve (locked open) supplied by PACKAGER.

4.15.12. PACKAGER shall supply the DGS system fully fitted with piping and support on the main equipment baseplate.

4.15.13. All piping, valves and fittings shall have insulation and/or heating, where applicable.

4.15.14. INTEGRATOR must guarantee instrument air for booster and nitrogen supplying for seal system during all compressor cases including pressurization, pressurized, depressurization and lube oil running conditions. Therefore, the nitrogen supply capacity shall be defined during the Detailed Design in accordance with the Vent System depressurization strategy. Complete high pressure nitrogen storage system including intensifier is acceptable by means to be defined by INTEGRATOR (nitrogen bottles or pressure vessel).

4.15.15. If required, the nitrogen shall be also conditioned by Seal Gas Conditioning System (SGCS) to be provided by PACKAGER.

4.15.16. DGS system shall be provided with all control, monitoring and safeguarding instrumentation, including monitoring primary vent by pressure and flow (alarm and trip) and secondary vent by pressure and flow (alarm and trip), according to API STD 692 Modules J and K, to identify DGS damage.

4.15.17. PACKAGER shall supply any pressure control valves if necessary to guarantee minimum back pressure at DGS primary vent line.

INTERNA \ Força de Trabalho

4.15.18. A Seal Gas Conditioning System (SGCS) shall be furnished by DGS supplier and shall be designed to remove all particles and liquids from the compressor discharge gas. This conditioned gas will supply the primary seal, avoiding any kind of failure.

4.15.19. PACKAGER shall guarantee a clean gas flow and it shall be supplied at a temperature providing at least 20 °C (35 °F) margin from the dew point line in order to preclude the possibility of liquid entering or forming in the dry gas seal, and at least 15 kPa (at upstream of primary seal) higher than compressor end with the higher sealing pressure inboard of the process side labyrinth. The SGCS shall include as a minimum:

- Pressure Differential Control Valve (PDCV) to control seal gas supply;
- Seal gas K.O. Drum to collect the condensate with automatic drain by LV and LSH;
- Twin filter separator and coalesce filter arrangement (2x100%) for solid and liquid retention with on-line changeover capability and automatic drain by LV and LSH;
- Twin pneumatic pressure boosters (2x100%) shall be provided to ensure seal gas pressure at 15 kPa (upstream primary seal) above balance line pressure under any operating condition of compression system. Migration of the seal gas to the instrument air and vice versa cannot occur at any time. Electric booster 2x100% is acceptable. Accumulator batteries and batteries chargers shall be optimized for entire system and shall have full redundancy.
- Electric heater exchanger with 10% spare electrical resistance elements. Sensors for seal gas temperature control shall be installed as close as possible to the DGS inlets. When electric heater is not being demanded (compressor is depressurized) it shall be kept energized (warmed) to avoid low insulation in the resistive elements and shall be sized according to API 692 regarding to the flow capacity.
- The SGCS components shall be installed according to the sequence stated above (PDCV, KO drum, filters, boosters and heater exchanger);
- All seal gas lines between the heater exchanger and DGS inlets shall be thermally insulated for heat conservation (HC);
- If other valves (PCV or PDVC) are supplied, beside the required at the inlet of the seal gas treatment system, coalescer filters downstream of the valves shall also be provided. These coalescer filters shall have automatic drain by LV and LSH;
- The SGCS logic control shall be designed to ensure a safe and reliable operation for each compressor casing mounted on the main baseplate for all operating conditions (pressurizing, starting, operation, normal stop and emergency shutdown, during depressurization or when stopped pressurized);
- Automatic drains shall only be opened when the compressor is pressurized.

4.15.20. In order to minimize the DGS system footprint, PACKAGER may propose keeping all the appurtenances described above integrating the SGP (Seal Gas Panel) with the SGCS (Seal Gas Conditioning System). This solution is to be submitted in the technical proposal to PETROBRAS' approval.

4.15.21. Drains shall be provided for seal gas KO Drum, filters and all seal lines, including primary and secondary vent lines. Drainage shall occur in all lower parts of the piping. The pipes arrangement shall avoid liquid accumulation (siphon).

4.15.22. All potential failure modes and combinations that can occur within the entire seal system shall be identified by PACKAGER. These identified failure modes shall be addressed to ensure adequate response time, safe shutdown, and minimal outage time, as stated in API STD 692. Failure of the primary seal shall trigger an automatic shutdown with depressurization.

4.16. Pressure Relief and Drainage

4.16.1. PACKAGER shall inform maximum allowable pressure for each shaft-end seal casing, considering all operational conditions or when PDCV failures (fail open), whichever is greater. If the seal gas or

buffer gas system rating is less than MAWP of the compressor suction vessel, a relief system shall deal with. The maximum sealing pressure shall be at least equal to the settle-out pressure.

4.16.2. The elastomers applied to compressors and auxiliary systems components such as DGS (Dry Gas Seal), SGP (Seal Gas Panel), SGCS (Seal Gas Conditioning System) etc, in contact with process gas, shall be select from the requirements recommendations and procedures of qualification and testing according to the criteria established in ISO 23936-2, to prevent explosive decompression of internal components, as well as to exhibit long term resistance behavior under thermal and dynamic cycle conditions, including the depressurization rate recommended in the API 521 standards.

4.16.3. The compressor casing draining operation shall be carried out with depressurized compression plant. Drains with valves shall be provided for all compressor stages (impeller-diaphragm cavity) and inlet and discharging volutes, installed on the edge of the skid. The drain valves shall be configured with double blocks to closed and opened drains. If drainage of individual stage cannot be accomplished due to design limitations, it shall be demonstrated during the proposal phase (by means of drawings) that all inner parts will have an effective drainage.

4.16.4. Seal gas supply lines drainage operation shall be carried out with depressurized compressor. The primary vent lines and secondary vent lines drainage shall be performed only with depressurized compressor. The seal gas and primary vents valves shall be configured with double blocks to closed and opened drain. The secondary vents valves shall be configured with simple block to opened drain. All valves shall be installed on the edge of the skid.

4.16.5. Separator and Coalescer filters drain of SGCS (Seal Gas Conditioning System) and SGP (Seal Gas Panel) shall be carried out with either pressurized or depressurized compressor. The valves shall be configured with double blocks to closed and opened drains. All valves shall be installed on the edge of the skid. Automatic drainage liquid of seal gas KO Drum and Coalescer filters shall be drained to the same piping that will receive the liquid from the compressor suction process KO Drum.

4.16.6. All drains for compression system, like vessels, compressor casings, seal gas KO Drum, filters, seal gas supply lines, primary and secondary vent lines, shall be installed in all lower parts of the piping to enable liquid removal during start-up procedures. The pipes arrangement shall avoid the accumulation of liquid (siphon).

4.16.7. PDITs associated with SDVs shall be able to indicate positive and negative values to avoid SDV opening when downstream pressure is larger them upstream pressure.

5. AUTOMATION

5.1. General requirements

5.1.1. Package Automation System (PAS) shall supervise and control the compression service that include Turbocompressor and auxiliaries as well as its compression process plant.

5.1.2. PACKAGER will be responsible for all required control interlocking interface and communications architecture with the systems/process plant outside its scope of supply, in order to guarantee the proper start-up, operation, pressurized and depressurized shutdown.

5.1.3. Unit Control Panel (UCP), Machinery Protection System (MPS), Compressor Governor System (CGS), Asset Management System (AMS) interface and Device and Field Instrumentation are part of PAS.

5.1.4. PAS shall be designed to ensure safe and reliable operation, performing sequencing, interlocking, protection, control and monitoring during pressurizing, starting, operation, normal stop, emergency shutdown, pressurized stopped, depressurization and depressurized stop. The PAS shall not allow undesirable nor unsafe operations. PAS shall be furnished functionally assembled and tested.

INTERNA \ Força de Trabalho

5.1.5. Depressurized Emergency Shutdown events shall be minimized.

5.1.6. The Package depressurization must be submitted to CSS-PSD authorization. In case of depressurized ESD event, PAS shall immediately stop the machine and request authorization to open the BDV through the BLOWDOWN ACKNOWLEDGE signal (USB-1) and wait for authorization by the REMOTE DE-PRESSURIZED BLOWDOWN signal (XSLL-2). Therefore, Package must be able to be kept pressurized up to the time to be defined during the detail design in accordance of the Vent System depressurization strategy, especially in black shutdown.

5.1.7. The PAS shall be designed according to the requirements described in specifications I-FD-3A17.01-1231-321-1J5-001 – TURBOCOMPRESSOR, I-ET-3926.01-1200-800-PPC-002 - AUTOMATION, CONTROL AND INSTRUMENTATION ON PACKAGE UNITS and specifications required by international standards and requirements, as well as the following specifications:

- ET-3000.00-1200-800-PCI-001 - CRITERIOS GERAIS PARA PROJETO DE INSTRUMENTACAO E CONTROLE
- I-ET-3926.01-1200-800-PPC-001 - INSTRUMENTATION ADDITIONAL TECHNICAL REQUIREMENTS
- I-ET-3926.01-1200-800-PPC-002 - AUTOMATION, CONTROL AND INSTRUMENTATION ON PACKAGE UNITS
- I-ET-3926.01-5523-863-PPC-001 - SUPERVISION AND OPERATION CENTRAL SYSTEM
- I-DE-3926.01-1200-800-PPC-001 - AUTOMATION AND CONTROL ARCHITECTURE: OVERVIEW
- I-DE-3926.01-1200-800-PPC-003 – INSTRUMENT CABLE WAY
- I-ET-3926.01-5523-800-PPC-001 - SYSTEM INTEGRATION REQUIREMENTS
- I-ET-3926.01-5523-846-PPC-002 - SAFETY INTERLOCK SYSTEM
- I-ET-3926.01-5523-898-PPC-001 - CONTROL / INTERLOCKING PANELS
- I-ET-3926.01-5523-846-PPC-001 - PROGRAMMABLE LOGIC CONTROLLERS
- I-ET-3926.01-5523-800-PPC-002 - PROCESS CONTROL AND MONITORING SYSTEM
- I-ET-3926.01-1200-940-PPC-001 - GENERAL TECHNICAL DESCRIPTION
- I-FD-3926.01-5523-863-PPC-001 - SUPERVISION AND OPERATION SYSTEM EQUIPMENT: HARDWARE
- I-FD-3926.01-5523-863-PPC-002 - SUPERVISION AND OPERATION SYSTEM EQUIPMENT: SOFTWARE
- I-MD-3926.01-5523-800-PPC-001 - AUTOMATION AND CONTROL FUNCTIONS
- I-ET-3926.01-5400-300-PPC-001 - FIRE PROTECTION FOR MACHINERY HOODS
- I-ET-3010.00-1200-850-P4X-002 - ASSET MANAGEMENT SYSTEM (AMS);
- I-ET-3010.00-5520-800-P4X-004 - AUTOMATION NETWORK REQUIREMENTS;
- I-ET-3010.00-5500-854-P4X-001 - MACHINERY MONITORING SYSTEM;
- I-LI-3010.00-5140-797-P4X-001 - ELECTRICAL SYSTEM AUTOMATION INTERFACE SIGNALS LIST;
- I-ET-3926.01-1200-800-PPC-003 - FLOW METERING SYSTEM
- I-DE-3926.01-5140-700-MJU-004 - TYPICAL DETAIL OF INSTALLATION – GROUNDING;
- I-ET-3010.00-5140-700-P4X-001 - SPECIFICATION FOR ELECTRIC DESIGN FOR OFFSHORE UNITS;
- I-ET-3926.01-5140-700-PPC-005 - GENERAL REQUIREMENTS FOR HUMAN ENGINEERING DESIGN FOR ELECTRICAL SYSTEMS OF OFFSHORE UNITS;
- I-ET-3926.01-5140-712-PPC-001 - INDUCTION MOTORS FOR OFFSHORE UNITS;
- I-ET-3010.00-5140-741-P4X-001 - LOW-VOLTAGE MOTOR CONTROL CENTER AND SWITCHGEAR FOR OFFSHORE UNITS;
- I-ET-3010.00-5143-700-P4X-001 – ELECTRICAL SYSTEM PROTECTION CRITERIA;

INTERNA \ Força de Trabalho

5.1.8. All instrumentation and alarms/trips mentioned in the data sheets and process plant P&IDs are the minimum required by PETROBRAS. PACKAGER may indicate other instrumentation and alarms/trip for general protection and monitoring according to their experience and submit in technical proposal to PETROBRAS for approval.

5.1.9. PACKAGER shall supply Unit Control Panels (UCP). UCP will be installed in the Automation Turbomachinery Room (ATR) in Module 04.

5.1.10. All requirements for PAS shall be checked during Factory Acceptance Test (FAT) and Site Acceptance Test (SAT) according to IEC 62381.

5.1.11. PAS shall have its package classification according to Technical Specification I-ET-3926.01-1200-800-PPC-002 - AUTOMATION, CONTROL AND INSTRUMENTATION ON PACKAGE UNITS.

5.1.12. PLC shall be designed according to the requirements described in the specification I-ET-3926.01-5523-846-PPC-001 - PROGRAMMABLE LOGIC CONTROLLERS and I-MD-3926.01-5523-800-PPC-001- AUTOMATION AND CONTROL FUNCTIONS.

5.1.13. PACKAGER shall provide PETROBRAS with all keys, drivers, manuals, installation media and licenses of all software inside package, including all development tools. No software access restrictions will be accepted by PETROBRAS. The PACKAGER shall provide the editable software.

5.1.14. The PACKAGER shall perform dynamic simulation to at least set the anti-surge valve, optimize tuning of capacity, and anti-surge controls, confirm Settle Out Pressure (SOP), calculate purge, pressurization and depressurization times.

5.1.15. The field instruments, cable tray and Junction boxes shall be designed according to the requirements described in the specification I-ET-3926.01-1200-800-PPC-001 - INSTRUMENTATION ADDITIONAL TECHNICAL REQUIREMENTS.

5.1.16. All proper means of electrical and environmental protection shall be applied to all instruments and electrical equipment, particularly those located in hazardous areas and/or an aggressive saline air environment. Instruments and electrical equipment shall comply with IEC-60079 and they shall be at least IP-56.

5.1.17. To guarantee adequacy to IEC-61892-7, all instruments installed in field open areas shall be certified to operate, at least, in Zone 2 Group IIA temperature T3. Certified enclosures against explosive atmosphere are mandatory.

5.1.18. Fiber optic cable and accessories shall be designed in according to the requirements described in the items below and in the specification I-ET-3926.01-5523-898-PPC-001 – CONTROL / INTERLOCKING PANELS.

5.1.19. PACKAGER shall provide a local gauge board (rack) installed on the equipment baseplate, as mentioned on data sheets and process plant P&IDs. Oil filled gauges shall be provided for analogical instruments subject to high vibration levels.

5.1.20. PAS shall not be restarted without manual acknowledgement of the shutdown conditions.

5.1.21. The available power supply for PAS is 220Vac @ 60Hz, fed by Uninterruptible Power Supply Normal Loads (UPS-5265002) under normal operation conditions and by Uninterruptible Power Supply Emergency Loads (UPS-5265001A/B) through two independent circuits under emergency operation conditions. (Rev. A)

5.1.22. Junction boxes (JBs) and other peripherals with Ex-e type protection should preferably be considered. Peripherals installed in Ex-d type enclosures are not permitted.

5.1.23. The 220 Vac power to the PAS must be guaranteed during black shutdown event in the time required to complete package depressurization. This time shall be defined during detail design in accordance of the Vent System depressurization strategy.

INTERNA \ Força de Trabalho

5.1.24. PACKAGER shall not supply any components (including hardware, firmware, software etc.) for PAS that are obsolete or that have Declaration of Obsolescence.

5.1.25. If any of the supplied PAS components (including hardware, firmware, software etc.) are obsolete or becomes obsolete (Declaration of Obsolescence) during the first 7 years of operation, PACKAGER shall replace the component that meets all necessary requirements, and any necessary interface adaptation, without cost.

5.1.26. Instruments used to monitor thrust load on gas turbines shall be transmitters and not local gauges.

5.1.27. The Automation panels shall be designed according to the requirements described in the items below and in the specification I-ET-3926.01-5523-898-PPC-001 – CONTROL / INTERLOCKING PANELS.

5.1.28. PLC platforms shall be compatible with the existing PLC installed base at the Unit, i.e. Rockwell Automation and Emerson PACSystems.

5.2. PAS hardware

5.2.1. The Unit Control Panels (UCPs), to be located in the ATR in Module 04, shall have, at least, IP56 protection level and cable entry from the bottom of the panel. The internal temperature shall be kept below 30 ºC. Each UCP shall include, at least:

- One dedicated safety system and one dedicated control system, each system shall be implemented using Programmable Logic Controllers (PLC);
- HMI hardware (UCP_HMI);
- Machinery Protection System (MPS);
- Ventilation exits at the top;
- 02 Network switch and 02 DIO optical fiber;
- Acknowledgment and reset push-buttons;
- Redundant communication network system with the automation and control system;
- Compressor start and stop pushbuttons in the HMI. Compressor start and stop and lamp status pushbuttons can also be by hardware on the panel front door;
- Emergency shutdown retentive push-button in the HMI. Emergency shutdown retentive push-button shall also be by hardware on the panel front door;
- Auxiliaries' devices start-up and stop pushbuttons and switches (to define main and stand-by) in the HMI. Auxiliaries' devices start-up and stop pushbuttons and switches can also be by hardware on the panel front door;
- Sound alarm;
- Start counter and hour meter in the HMI. Start counter and hour meter shall also be by hardware in the panel front door;
- Asset Management System (AMS) interface;
- Emergency Shutdown Relay (RESD);
- Fire and Gas Safety System;
- UCP and all its components shall be designed considering that ATR temperature can reach 40 °C.
- The automation panel shall be supplied with a redundant 220 VAC 60HZ voltage level from the UPS.
- The automation panel shall be supplied with 220 VAC 60HZ electricity to power auxiliary loads (notebook power outlet).

5.2.2. Compressor Governor System (CGS), located inside the UCP Panel, shall include, at least:

- Capacity control;
- Anti-surge controls;

INTERNA \ Força de Trabalho

- Automatized Procedures Module (MPA) interface;
- Human Machine Interface of Compressor Governor System (CGS_HMI), loose item for installation in ATR.

5.2.3. The network switches shall be an industrial manageable type.

5.2.4. Control and supervisory networks must be redundant.

5.3. PAS software

5.3.1. PAS shall enable changes of set points, timer presets and control parameters, input bypassing and output override with the system in operation, without damage to the process.

5.3.2. The control system programming and configuration shall be carried out by the UCP_HMI through a laptop computer not provided by PACKAGER. The software editors shall be provided by PACKAGER.

5.3.3. HMI software (with runtime and development licenses) shall be provided.

5.3.4. Access to configuration and programming shall be protected by change management tools, including specific passwords with several levels, such as general, operation, maintenance and engineering. All passwords shall be delivered to PETROBRAS with NO access restrictions.

5.3.5. The control system programming shall be in accordance with PETROBRAS specifications. PACKAGER proposal shall inform which programming languages is used in the system.

5.3.6. The alarm annunciator units shall comply with ISA-18.1, according to the sequence F2M-1 (manual reset first out with no subsequent alarm flashing and silence push button). Alarm Management Systems shall comply with ISA-18.2.

5.4. PAS system

5.4.1. The PAS shall be capable of carrying out control, interlock, process, start-up, normal stop, emergency shutdown, normal operation and safety procedures for main machinery and auxiliary equipment, including all the necessary interfaces to connect with Motor Control Center (MCC) and other controls and PETROBRAS security systems, such as: Control and Safety System (CSS), and Asset Management System (AMS). PAS shall not allow undesirable or unsafe operations.

5.4.2. Emergency Shutdown Relay (RESD) shall be provided to actuate directly on the fuel gas shutoff valves and on the process plant SDVs.

5.4.3. The Emergency shutdown retentive push buttons, signal from CSS-FGS - REMOTE DE-PRESSURIZED BLOWDOWN, CSS-PSD - REMOTE PRESSURIZED SHUTDOWN, over speed and MPS, shall actuate the RESD and be used as input for UCP safety PLC.

5.4.4. PAS shall include, at least, the following functions:

- Start-up, crank/purge, warm-up, loading, automatic or manual synchronization and load sharing, normal stop and emergency shutdown sequences without causing any damage to equipment or process instability;
- Indication and recording of unit malfunction/shutdown, event signals and all machinery sequences (such as start-up, normal stop, etc.);
- Monitoring and control of all variables, alarms and shutdown signals with UCP_HMI indication as described in PETROBRAS specification (such as temperature, pressures, etc. indicated in P&IDs and data sheets), as well as required by international standards and PACKAGER experience;
- Suction gas flow for each compressor stage in m3/h.

INTERNA \ Força de Trabalho

- Gas fuel specific consumption flow in Sm3/h (corrected to PETROBRAS standard conditions at 1atm and 15.6ºC);
- Fuel gas consumption totalizer;
- Monitoring and control of variable geometry system position;
- Ignition and fuel monitoring and control (including fuel control valve position);
- Enclosure ventilation and fire & gas system monitoring and control;
- Automatic on-line and off-line turbine cleaning system.

5.4.5. PAS shall send and receive hardwired signals to/from Control and Safety System (CSS) according to I-ET-3926.01-1200-800-PPC-002 - AUTOMATION, CONTROL AND INSTRUMENTATION ON PACKAGE UNITS. Some of the hardwired signals are:

- To CSS-PCS - RUNNING/STOPPED – Indicates whether the package is running or stopped. This package output shall be a normally open dry contact. This contact opens to indicate stopped condition (YLHL);
- To CSS-PCS - MALFUNCTION SUMMARY – Summary signal of all conditions that cause pre-alarm or Package malfunction. This package output shall be a normally open dry contact. This contact opens to indicate pre-alarm or package malfunction (UAM);
- To CSS-PSD - SHUTDOWN ACKNOWLEDGE – Indicates that the Package has perceived an internal shutdown condition (including electrical failure) or received an external shutdown signal and is starting to process its shutdowns commands. This package output shall be a normally open dry contact. This contact opens to indicate the shutdown acknowledge (UAS-1);
- To CSS-PSD - SHUTDOWN CONFIRMED – Indicates that the package successfully processed the received shutdown command. This package output shall be a normally open dry contact. This contact opens to indicate the shutdown confirmation (UAS-2);
- To CSS-FGS - BLOWDOWN ACKNOWLEDGE – Indicates that the Package has perceived an internal blowdown condition or received an external blowdown signal and is starting to process its depressurization commands. This package output shall be a normally open dry contact. This contact opens to indicate the blowdown acknowledge or a Package authorization request for blowdown (UAB-1);
- To CSS-FGS - BLOWDOWN CONFIRMED – Indicates that the package successfully processed the received blowdown command. This package output shall be a normally open dry contact. This contact opens to indicate the blowdown confirmation. (UAB-2);
- From CSS-PSD - REMOTE PRESSURIZED SHUTDOWN – Fail Safe 24 VDC signal sent by CSS for safe shutdown of the Package (XSLL-1);
- From CSS-FGS - REMOTE DE-PRESSURIZED BLOWDOWN – Fail Safe 24 VDC signal sent by CSS for safe depressurization of the Package (XSLL-2).

5.4.6. PAS shall send and receive hardwired signals to/from Electrical System according to I-LI-3010.00-5140-797-P4X-001- ELECTRICAL SYSTEM AUTOMATION INTERFACE SIGNALS LIST.

5.4.7. PAS shall have high reliability, integrity and availability for operation in fail safe mode in order to avoid, whenever possible, an unnecessary shutdown or loss of any process variable with safety function.

5.4.8. PAS shall include on-line testing and self-diagnosis facilities, to allow the maintenance technician to identify failures, enabling corrective maintenance without causing unit shutdown and avoiding operation without any safety function.

5.4.9. In case of power failure, the system shall retain all programs and data as well as interface software for a minimum of six months, not being necessary to reconfigure the system after power restore. During a power failure, all outputs shall be automatically changed to their safe position.

5.4.10. Connectivity to external system through open communication protocols shall be MODBUS and OPC (Open Platform Communications) by Ethernet TPC/IP Protocol. All I/O digital/analogic variables, alarms and trips, controllers' signals and parameters (including performance, load sharing, anti-surge

and MPS) and events including first-out shall be available. Diagnostic signals from the network, CPU/Hardware, HMI, F&G, Bentley Nevada, and soft start should be considered when communicating with the control room. PACKAGER shall generate a Memory Map of the communication between the automation, instrumentation and electrical equipment.

5.4.11. The UCP interface with Asset Management System (AMS) shall be as described in I-ET-3010.00-1200-850-P4X-002 - ASSET MANAGEMENT SYSTEM (AMS). UCP controllers shall be HART compatible, without the need for multiplexers.

5.4.12. The control PLC shall be supplied with redundant communication modules for communication with the control room.

5.4.13. The safety PLC shall be supplied with redundant communication modules for communication with the control room.

5.4.14. The control PLC shall be supplied with communication modules for communication with other systems like MPS, Fire and Gas System and Soft Starter/VSD (if necessary).

5.5. Human Machine Interface (HMI) of UCP

5.5.1. UCP_HMI shall allow the operator to view and acknowledge alarms and trips, protections reset, status of each I/O and intermediate variables, software monitoring/modification, system configuring, first-out of alarms and shutdowns, list of set points and parameters, analog variables, variables performance and trend, recording of all relevant data and periodic reports, events, number of starts and operation hours, bypass of inputs and override of outputs.

5.5.2. UCP_HMI shall comply, at least, with the following requirements:

- Industrial microcomputer installed inside the panel housing;
- One additional Ethernet network card available for PETROBRAS use purpose (remote monitoring connection);
- HMI screen shall be on the front door of the panel. Minimum 20-inch widescreen LCD color touch screen display. The CPU of HMI shall be independent from the display screen of HMI;
- Historical log:

  a) Daily files - Recording and storing of all digital and analog variables, alarms and events of PAS system with 1 second sample time. Storage shall be at least 72 files (24 days x 3 months);
  b) Hourly files - Recording and storing, in high speed (minimum sample time shall be less than 120 milliseconds), of all analog and digital variables, alarms and events of PAS system. Storage shall be at least 72 files (24 hours x 3 days).
- Event and trigger log:
  a) Storing all variables in the minimum sample time (less than 120 milliseconds) during 15 minutes, 10 minutes before and 05 minutes after the programmable event/trigger. Storing at least 150 files per programmable event/trigger;
  b) All events and all analog/digital variables (trigger is reaching a preset value) must be programmable to start storage. ESD or Normal Stop are events that shall already be programmable in UCP_HMI to start storage.
- Trend with capable of playback any stored variables and showing a set of minimum 12 variables at the same time;
- Capable of export of stored variables logs in the CSV standard (data separated by semicolon);

INTERNA \ Força de Trabalho

- Listing in chronological order of all alarms, trips, events and user-defined actions with PLC timestamps with milliseconds time resolution. The message of first trip of SD sequence shall be emphasized;
- Display of process plant and auxiliaries PI&Ds with all variables and variables from Compressor Control;
- Display of equipment schematic layout with all variables from the Machinery Protection System.

5.5.3. PACKAGER shall provide UCP_HMI supervisory software (runtime and development tool) running on Windows environment, compatible with the size of the application and in its latest version. Software shall be supplied, installed, configured in the UCP_HMI and provided with complete manuals/electronic media. Software licenses shall also be provided.

5.5.4. Access to configuration and programming shall be protected by change management tools, including specific passwords with several levels, such as general, operation, maintenance and engineering. All passwords shall be delivered to PETROBRAS with NO access restrictions.

5.5.5. If, for any reason, UCP_HMI has some malfunction, the control system shall continue with all its function normally. PACKAGER shall provide a hardware interface (such as a laptop computer connection) in order to establish external communication with PLC.

5.5.6. English and Brazilian Portuguese languages shall be used on all UCP_HMI screens installed on UCP.

5.5.7. Each UCP_HMI must also be able to allow operation of any further compression train in this compression service, including remote UCP_HMI. All Data (historical trend, event and trigger and alarm and trip logs) shall be synchronized among all HMIs.

5.5.8. All PLCs, HMIs, MPS shall be synchronized. Time synchronism shall be sent from Time Servers.

5.5.9. UCP_HMI software must be compatible with OSI “Plant Information-PI” software.

5.5.10. One remote UCP_HMI for each compression service shall be provided, with the same functionalities of the UCP_HMI, to be installed in the Central Control Room (CCR). This UCP_HMI shall be a 19" rack-mounted PC. The PC shall have three Ethernet ports, and each port must be connected to the PAS system switch of each compression train.

5.6. Machinery Protection System (MPS)

5.6.1. Machinery Protection System (MPS) shall be according to the latest revision API 670.

5.6.2. The MPS shall be designed according to the requirements described in the items below and in the specification I-ET-3010.00-5500-854-P4X-001 – MACHINERY MONITORING SYSTEM.

5.6.3. Probe arrangement for driven equipment, gearbox and driver:

- Radial vibration: Two (2) non-contact probes for each radial bearing (X-Y signal).
- Axial position: Two (2) non-contact probes for each axial bearing.
- Phase: One (1) phase reference transducer for every different shaft speed.
- Casing vibration: Two (2) accelerometers for gearbox casing (one (1) over the input and one (1) over the output shaft centerline, near radial bearings); two (2) accelerometers for gas turbine (one (1) for GG and one (1) for PT at least);
- Gearbox probe arrangement shall be manufacturer's standard.

5.6.4. Probes shall allow gap adjustment.

5.6.5. All bearings must have metal temperature monitoring (two sensors installed, one spare). Only where metal bearing temperature measure is not feasible, PACKAGER shall propose a bearing oil

INTERNA \ Força de Trabalho

outlet temperature gauge with the same alarm and shutdown signals as indicated for metal bearing temperature in data sheets.

5.6.6. All vibration and temperature protection systems shall be according to Original Equipment Manufacturer (OEM) standards and API 670 compliant.

5.6.7. Each monitor channel shall be capable of continuously comparing the input signal to warning set points. The warning system shall comprise at least two (2) levels: alarm and shutdown. The exception is an axial position monitor, for which shall be supplied with four (4) independent alarms and shutdown adjustable limits (two (2) for each direction).

5.6.8. The vibration signals (including displacement and accelerometers) of the whole train shall have an unfiltered output at the UCP (one per channel) for recording and maintenance purposes.

5.6.9. Each channel shall be supplied with an electronic configurable time delay to avoid activation of alarm during transient signals.

5.6.10. All wiring shall be protected by flexible conduits to a stainless steel AISI 316L junction box (at skid edge), neatly routed to allow machine maintenance without damaging probes and wire leads.

5.6.11. Extension cables shall be armored and installed on cable trays.

5.6.12. Oscillator-demodulators shall be mounted in an intrinsically safe junction box, if applicable.

5.6.13. Paired channels (XY) from the two transducers mounted at each bearing for radial shaft vibration monitoring shall be allocated at the same MPS IO card.

5.6.14. A controlled access point multiplier function shall be provided with actuation by an external contact closure which causes the alarm (alert) and shut down (danger) set points to be multiplied by a factor.

5.6.15. All vibration signals channels shall be allocated at the same MPS monitor of the corresponding phase reference signal channel.

5.7. Compressor Governor System (CGS)

5.7.1. General requirements

5.7.1.1. Compressor Governor System (CGS) consists of the following controls: Capacity, Anti-surge controls and a specific HMI for Compressor Governor System (CGS_HMI). These controls shall be integrated (so any individual corrective action taken by one loop shall not degrade a response from another). CGS shall enable adjustment of all parameters and perform inputs bypass without causing process disturbances, keeping the plant in safe condition.

5.7.1.2. Capacity and Anti-Surge controls systems shall be implemented by separated and dedicated microprocessors. and the Control system and the Safety system PLCs of UCP shall be segregated, with hardwired interlock and network for communication purpose.

5.7.1.3. A dynamic simulation shall be applied to size ASV and to tune the capacity and anti-surge controls to optimize all controls. The simulation shall evaluate protection from surge during steady state operation, start-up and normal/emergency stop (pressurized or depressurized), considering possible interactions with other packages. The dynamic simulation shall also be used to identify any additional required valves for anti-surge system and to avoid compressor rotation during depressurization after the compressor stopped. Supply of additional valves is the responsibility of the PACKAGER and their installation is the responsibility of the INTEGRATOR.

5.7.1.4. Anti-surge valve shall be sized according to dynamic simulation process and submitted to PETROBRAS. PACKAGER shall bear in mind the requirement of the dynamic simulation applied

INTERNA \ Força de Trabalho

to define the Coefficient flow (Cv) of anti-surge valve, and to tune the capacity and anti-surge controls in order to optimize all controls.

5.7.1.5. Cancelled (Rev. A).

5.7.1.6. The anti-surge valves, with their associated devices (positioners, air boosters, limit switches and solenoids), pipelines, tubing, instrumentation (flows, pressures and temperatures), orifice plates, and check valves associated with CGS shall be specified by Compressor Governor VENDOR. The design of controllers, valves, instrumentation, tubing and pipelines associated with CGS shall be submitted to PETROBRAS together with the certificate of approval issued by the Compressor Governor VENDOR.

5.7.1.7. PACKAGER shall furnish the anti-surge valves, with their associated devices such as, positioners, air boosters, limit switches and solenoids, all instrumentation of CGS, including transmitters (flows, pressures and temperatures) and orifice plate.

5.7.1.8. All pressure, flow transmitters and positioner of CGS shall be smart with HART protocol and maximum response time of 100 milliseconds. Transmitters must be installed above the process connection and piping routing must not form siphons. The length of the tubing for the flow transmitter may not exceed 3 meters and pressure transmitter may not exceed 5 meters.

5.7.1.9. All analog and digital variables and events shall be available for CGS_HMI and UCP_HMI at ATR.

5.7.1.10. CGS shall have fallback strategies to allow the capacity and anti-surge system to continue operation in the event of transmitter failure.

5.7.2. Capacity control

5.7.2.1. Each compression service type shall have a Capacity control.

5.7.2.2. Capacity control shall maintain the suction pressure and limit the maximum discharge pressure of compressor trains. If the discharge pressure exceeds the set point, system shall switch from suction pressure control to discharge pressure limit. The control shall operate in automatic and manual modes. These set points shall be monitored and defined from UCP_HMI of Unit Control Panel (UCP) at ATR.

5.7.2.3. Capacity control shall be mounted on Unit Control Panel (UCP) at ATR.

5.7.3. Anti-Surge (AS) control

5.7.3.1. Each compression stage (section) shall have its anti-surge control.

5.7.3.2. For design purpose, PACKAGER shall consider one AS recycling line for each stage in its proposal. Overall recycling line shall not be accepted.

5.7.3.3. PACKAGER shall furnish the anti-surge control valves with their instrumentation including transmitters (flow, pressure and temperature) for each stage (section). The anti-surge valves, instrumentation and associated piping shall be specified by Anti-surge System VENDOR. The design of the anti-surge valves, instrumentation and associated piping shall be submitted to PETROBRAS together with the certificate of approval issued by the Anti-surge VENDOR, including check valves.

5.7.3.4. The volume between discharge compressor, check valve and ASV shall be the smallest possible.

5.7.3.5. ASV shall be sized to perform their function in all operating conditions, including transients, avoiding choke zone but not oversized to maintain their controllability. ASV shall be open at failure type, with linear response, class 5 balanced cage globe, body material according to the AS recycle line material specification, stainless steel AISI 316L seat material with “Stellite” or

INTERNA \ Força de Trabalho

equivalent hardness material, no chromium coating shall be accepted and with anti-noise technology to attenuate up to 90 dBA @ 1m. No ASV material selection subjected to the galling nor any other wear/corrosion mechanism will be accepted;

5.7.3.6. ASV shall be mounted with high-speed intelligent positioner and high flow booster to increase the precision and speed of actuation;

5.7.3.7. The use of quick exhaust, or similar system that opens the ASV in an uncontrolled mode, is not allowed;

5.7.3.8. A three-way solenoid shall be used, between the booster and the actuator, with high Kv to allow the smallest stroke on the ASV. The solenoid shall be energized to allow modulation of the ASV;

5.7.3.9. The maximum anti-surge valve opening stroke time (0 to 100%) shall be up to 1 second for valves smaller than or equal to 4 ", up to 2 seconds for valves larger than 4" and less than 12 " and up to 3 seconds for valve larger than 12";

5.7.3.10. The minimum anti-surge valve closure stroke time (100% to 0) shall be up to 3 seconds for a valve smaller than or equal to 4 ", up to 5 seconds for valve larger than 4" and less than or equal to 12 " and up to 8 seconds for valve larger than 12";

5.7.3.11. AS control system shall be furnished with:

- A maximum scan time of 50 milliseconds;
- Compressor surge detector;
- Supervision and action in case of two (2) surge events within fifteen (15) seconds, the ASV shall be opened through current analog output and three-way solenoid deenergizing, installed between booster and actuator;
- Supervision and action in case of four (4) surge events within thirty (30) seconds, the AS control shall stop the compressor;
- Closed loop control signal with Proportional (P) and Integral (I) action for anti-surge control. P+I controller response shall be started when the Operation Point reaches the Surge Control Line. P+I controller shall be anti-reset windup action;
- Adaptative actions to allow the Surge Control Line to change as a function of the displacement of the operating point, with automatic return to the original position (when operating point reaches the Surge Control Line). The faster operation point moves towards the Surge Control Line, the faster Surge Control Line shall move towards the operation point. The Surge Control Line offset rate is a function of operation point offset and shall be an adjustable parameter;
- An adaptive open loop response to large and fast disturbances, when operating point reaches the line (Trigger Line), located between Surge Control Line and Surge Line. In this case the ASV opening response shall be immediate;
- ASV opening shall be proportional to the displacement rate from the operating point towards the Trigger Line;
- Maximum opening of the valve shall be an adjustable parameter.
- The open loop response signal shall return to zero proportionally to the inverse function of an exponential;
- The coefficients of the open loop response signal decay function shall be adjustable;
- The delay time for the start of signal return to zero shall be an adjustable parameter;
- An adaptive detection algorithm in order to protect the compressor by establishing new safety margins (more conservative than previous one) when a surge event occurs;
- Decoupling gains to reduce interaction between anti-surge controls and the other control loops of compression system. Decoupling gains shall be adjustable parameters;
- Control strategy that makes the Surge Line and Surge Control Line independent of variations in gas composition (molecular weight), suction pressure and suction temperature;

INTERNA \ Força de Trabalho

- Even when in manual operation, AS control shall be capable of switching over to automatic operating if close to surge condition;
- Capacity of limiting the maximum pressure and/or maximum discharge temperature and/or minimum suction pressure of compressor through anti-surge valve opening, independently of Capacity control. The performance of these limits shall not affect Anti-surge Control. Limit values that shall be adjustable;
- Fallback strategies shall be also available to allow the anti-surge system to continue operation in the event of transmitter failure. In case of flow transmitter failure, ASV shall be fully opened.

5.7.3.12. To achieve good controllability, PACKAGER shall review AS piping layout and confirm if it is suitable.

5.7.3.13. AS control and Capacity control controls from compression service shall have a decoupling capability to temporally reduce the Capacity control action when the AS control is performed, especially when opening the valve.

5.7.4. Automatized Procedures Module (MPA)

5.7.4.1. The MPA (Automatized Procedures Module) shall be designed according to the requirements described in the items below and in the specification I-ET-3926.01-1200-800-PPC-002 - AUTOMATION, CONTROL AND INSTRUMENTATION ON PACKAGE UNITS.

5.7.4.2. MPA will be defined by PETROBRAS during the detail design, or during the operation phase. These systems may use PETROBRAS software package, or third part packages when required, and run on computers in the automation network. The goal of MPA is to assist operators in integrating and coordinating the various systems.

5.7.4.3. PACKAGER shall provide connectivity through MODBUS and OPC for the MPA to read all critical variables of the compressor (pressures, temperatures, power, current, speed, etc.).

5.7.4.4. PACKAGER shall be able to receive 4-20mA input signals at Capacity Control for the compressor suction and discharge pressure remote set points. These remote set point signals (4-20mA) will be provided by Process Control System (PCS is scope of the INTEGRATOR). At UCP_HMI, the operator shall select if set points will be defined locally (at UCP_HMI) or remotely (from MPA signals). In this way, the MPA or the operator can command the pressure set points.

5.7.4.5. PACKAGER shall be able to receive for each AS recycle valve a 4-20mA input signal in AS control system. This signal will go to a low value selector (override) with the output of the anti-surge (AS) control algorithm. In this way, the MPA or the operator can command the opening of the recycle valve, even if the AS control does not need to open the valve. This override selector shall be implemented in AS control system, but the override signal (4-20mA) will be provided by the Process Control System (PCS is scope of the INTEGRATOR). At UCP_HMI, operator shall select if this remote ASV command will be enabled or not.

5.7.4.6. PACKAGER shall properly monitor the 4-20 mA input signals from remote setpoints and ASVs opening, so that the failure of these signals disables the action of the MPA on the respective controller. Human Machine Interface of Compressor Governor System (CGS_HMI)

5.7.4.7. PACKAGER shall supply a dedicated HMI of the Compressor Governor System (CGS_HMI) to be installed at the ATR. This CGS_HMI shall be a 19" rack-mounted PC, shipped loose.

5.7.4.8. CGS_HMI shall have at least the following functionality:

- Programming and configuration interface of Capacity and Anti-surge control systems and Automatized Procedures Module (MPA) interconnectivity;
- Historical log:

INTERNA \ Força de Trabalho

a) Daily files - Recording and storing of all analog and digital variables, alarms and events Capacity and Anti-surge Control Systems and MPA. with 200 milseconds sample time. Storage shall be at least 72 files (24 days x 3 months);

b) Hourly files – Recording and storing, in high speed (minimum sample time shall be less than 40 milliseconds), of all analog and digital variables, alarms and events Capacity, and Anti-surge Control Systems and MPA. Storage shall be at least 120 files (24 days x 5 days).

- Event and trigger log:
  a) Storing all variables at the minimum sample time (40 miliseconds) for 15 minutes, 10 minutes before and 05 minutes after the programmable event/trigger. Storing at least 150 files per programmable event/trigger;
  b) All events and all analog/digital variables (trigger is reaching a preset value) must be programmable to start storage. Surge and ESD Compressor are events that shall already be programmable in CGS_HMI to start storage.
- Trend with capable of playback any stored variables and showing a set of minimum 12 variables at the same time;
- Capable of export of stored variables logs in the CSV standard (data separated by semicolon);
- Simplified PI&Ds with all CGS parameters and variables;
- Compressor performance maps of all Operational Cases included in the compressor datasheet (API-617) showing the Operation Point, Surge Line, Trigger Line and Surge Control Line. The following maps are required: Rc x Q (m3/h), Pd (bar) x Q (m3/h), Td (ºC) x Q (m3/h), Hp (kJ/kg) x Q (m3/h), ηp (%) x Q (m3/h), Pot (kW) x Q (m3/h), Rc x QN (Nm3/d at 20 ºC and 1 atm);
- Compressor performance map Rc x Invariant flow of suction conditions showing the Operation Point, Surge Line, Trigger Line and Surge Control Line.

5.7.4.9. Access to configuration and programming shall be protected by change management tools, including specific passwords with several levels, such as general, operation, maintenance and engineering. All passwords shall be delivered to PETROBRAS with NO access restrictions.

5.7.4.10. PACKAGER shall provide CGS_HMI supervisory software (runtime and development tool) running on Windows environment, compatible with the size of the application and in its latest version. Software shall be supplied, installed, configured in the CGS_HMI and provided with complete manuals/electronic media. Software licenses shall also be provided.

5.7.4.11. A fiber optic port shall be available in the UCP of the compression system for this HMI interconnection.

5.7.4.12. One additional Ethernet network card available for PETROBRAS use (remote monitoring connection) and at least five (5) licenses for remote simultaneous clients are required.

5.7.5. Fire and Gas Safety system

5.7.5.1. The Fire and Gas Safety System shall be designed according to the requirements described in the specification I-ET-3926.01-5400-300-PPC-001 - FIRE PROTECTION FOR MACHINERY HOODS.

5.7.5.2. The system actuation (automatic and manual), the operation signaling and monitoring of the system functioning shall be controlled by the skid unit control and interlocking system.

5.7.5.3. All signals related to the gas and fire detection systems, as well as those related to the fire-fighting systems shall be sent to the ECOS through the skid unit local panel, in order to allow remote supervision, monitoring and operation from the Unit Central Control Room.

INTERNA \ Força de Trabalho

6. ELECTRICAL

6.1. Panels, Electrical equipment and materials shall comply with requirements of I-ET-3926.01-5140-700-PPC-002 - GENERAL SPECIFICATION FOR ELECTRICAL MATERIAL AND EQUIPMENT FOR OFFSHORE UNITS. Peripherals shall not be installed inside Ex-d enclosures, junction boxes and other peripherals shall preferably employ Ex-e protection.

6.2. Electrical installations inside the package and the voltages to be supplied for electrical loads (motors, heaters, control panels, etc.) shall comply with requirements of I-ET-3926.01-5140-700-PPC-003 – GENERAL ELECTRICAL REQUIREMENTS FOR PACKAGES FOR OFFSHORE UNITS.

6.3. Electrical motors shall comply with requirements of I-ET-3926.01-5140-712-PPC-001 - INDUCTION MOTORS FOR OFFSHORE UNITS. The electrical motors shall be fed from platform panels.

6.4. The electrical communications interfaces of the package shall comply with requirements of I-DE-3926.01-1200-800-PPC-006 - AUTOMATION FOR ELECTRICAL PANELS, I-DE-3926.01-1200-800-PPC-001 - AUTOMATION AND CONTROL ARCHITECTURE – OVERVIEW and I-MD-3926.01-5523-800-PPC-001 - AUTOMATION AND CONTROL FUNCTIONS.

6.5. Equipment, accessories, piping and structures shall be grounded according to requirements of I-DE-3926.01-5140-700-MJU-004 - TYPICAL DETAIL OF INSTALLATION – GROUNDING, I-ET-3010.00-5140-700-P4X-001 – SPECIFICATION FOR ELECTRICAL DESIGN FOR OFFSHORE UNITS, IEC 61892-6 and IEC-60092-502. Besides these standards, for installations in hazardous areas, the grounding requirements of IEC 61892-7 shall be complied with.

6.6. Other panels, except Motor Control Center (MCC), shall comply with requirements of I-ET-3010.00-5140-700-P4X-002 - SPECIFICATION FOR ELECTRICAL MATERIAL FOR OFFSHORE UNITS.

6.7. All electrical panels shall comply with I-ET-3926.01-5140-700-PPC-005 - GENERAL REQUIREMENTS FOR HUMAN ENGINEERING DESIGN FOR ELECTRICAL SYSTEM OF OFFSHORE UNITS.

6.8. Turbocompressor auxiliary loads shall be fed by auxiliary MCCs, provided by INTEGRATOR (out of scope of PACKAGER). However, PACKAGER shall provide all necessary information about auxiliary loads for INTEGRATOR, to allow complete and suitable fabrication of auxiliary MCCs or the integration with existing panels. Auxiliary MCCs (Motor Control Center) shall comply with I-ET-3010.00-5140-741-P4X-001 - LOW-VOLTAGE MOTOR CONTROL CENTER AND SWITCHGEAR FOR OFFSHORE UNITS.

6.9. The PMXL1 electrical system will supply electric power to the compression system according to the I-ET-3926.01-5140-700-PPC-004 – GENERAL SPECIFICATION FOR ELECTRICAL SYSTEM. The summary of the power supply is:

- Turbocompressor Starting System - 480Vac 3ph 60Hz;
- Auxiliary Loads - 480Vac 3ph 60Hz;

INTERNA \ Força de Trabalho

- Emergency Loads UPS System - 220Vac 3ph 60Hz;
- Normal Loads UPS System - 220Vac 3ph 60Hz;
- Dehumidifier Resistors and lighting - 220Vac 2ph 60Hz;
- Auxiliary Voltage – 125Vdc.

6.10. Motor loads for the emergency system shall be supplied by a dedicated emergency power system. The unit's UPS for emergency loads shall not be used for this purpose.

6.11. PACKAGER shall ensure the delivery to PETROBRAS of all licenses, keys, drivers, manuals, installation media, and any other resources required for all software included in the package, guaranteeing that they are fully editable and accessible.

6.12. All electrical and electronic equipment that remains energized during a shutdown shall be suitable for explosive atmospheres — at least Zone 2 IIA T3 — even if located outside classified areas.

7. OPERATION AND MAINTENANCE REQUIREMENTS

7.1. PACKAGER shall present applicable recommendations to optimize operation and maintenance, taking into account the remote location and platform general conditions. Any changes to equipment design, materials or specific spares that may improve the equipment's operation, availability or reliability shall be submitted to PETROBRAS for review and approval. But PACKAGER shall always comply with PETROBRAS requirements before suggesting any modification.

7.2. The packages shall be designed so that all maintenance can be carried out with standard tools as much as possible.

7.3. Equipment shall enable easy and safe access for maintenance to all components and parts. PACKAGER and INTEGRATOR shall provide suitable walkways, ladders and handrails inside the skids and inside the module, for all packages, including auxiliaries. All equipment and peripherals, especially oil reservoirs, shall have full access and inspection doors/hatches.

7.4. Instruments and piping accessories shall be arranged in proper locations to allow easy access by maintenance and operation personnel. Installation of piping and cable supports next to couplings, bearings and seals shall be avoided, for instance.

7.5. PACKAGER shall prepare detailed assembly, disassembly and maintenance procedures, describing the use of all involved lifting and handling apparatus and including all required preventive and corrective maintenance tasks. PACKAGER shall inform needs for disassembling any component or equipment in order to facilitate access for maintenance. Suitable maintenance routes shall be provided to remove the main components and auxiliaries, avoiding interference with structures, piping, cabling, electric conduits and supports, equipment, etc. This plan shall be submitted to PETROBRAS for approval.

7.6. PACKAGER shall provide electrically driven lifting/handling devices and external structure components enabling assembly, disassembly and removal all components inside the package (compressor, gearbox, gas turbine, etc.), including internal parts such as compressor bundle,

INTERNA \ Força de Trabalho

gearbox rotors with adequate and certified capacity to handle maximum maintenance weight and/or dimensions. Lifting and handling devices shall be according to I-ET-3926.01-5266-630-PPC-601 – CARGO HANDLING DEVICES.

7.7. PACKAGER shall include in proposal a schedule for the expected time between major overhauls.

7.8. PACKAGER shall provide a gearbox shaft end with an adaptor in order to allow manual turning for maintenance purposes.

7.9. Noise control requirements

7.9.1. Noise control analysis is a mandatory item to be carried out. PACKAGER shall present noise data regarding items included in scope of supply.

7.9.2. The GT acoustic enclosure shall be designed to reduce the noise pressure level emitted by the GT skid to lower than 85 dB(A) at 1.0 m distance, 1.5 m height in the free field conditions. The maximum allowable Turbocompressor train sound level shall be lower than or equal to 90 dB(A) at 1.0 m around the unit and up to 2.0 m from the floor. The noise control system for the package shall consider the noise radiated by inlet/outlet piping, equipment enclosure including ventilation system (if specified) and equipment casings.

7.9.3. Whenever electric motor drivers are used, it shall be verified if motor fan design can be modified (e.g., use of unidirectional blades, etc.) before any apparatus is applied for noise attenuation.

7.9.4. In case of expected noise is higher than allowable limits, the equipment must be furnished with some noise control reduction measure, and the maximum noise allowable value will be 85 dB(A). PACKAGER may consider the best solution, which may include acoustic blanket or acoustic walls (open roof) and safety system requirements. The use of device to comply with noise requirement must be proved to be efficient and submitted to PETROBRAS approval.

7.9.5. For all equipment installed without acoustic enclosure, the following data will be required during proposal phase:

- Sound power level of the equipment;
- Sound pressure level in all directions and at one point of the top.

7.9.6. For all equipment installed inside acoustic enclosure, the following data will be required during proposal phase:

- Sound power level of the equipment without enclosure;
- Sound pressure in all directions and at one point of the top, for the equipment plus enclosure;
- Acoustic data of enclosure and silencers, when applicable.

7.10. PACKAGER shall provide evidence demonstrating how Human Factors Engineering (HFE) considerations have been addressed in the design, including the standards applied and the anthropometric basis assumed for the operator population. For HFE considerations, PACKAGER shall comply with IOGP Report 454: Human Factors Engineering in Projects, latest edition.

7.11. Exposure to vibration during equipment-required operation and maintenance activities shall not exceed the limits established in I-ET-3010.00-1200-300-P4X-001 - NOISE AND VIBRATION CONTROL REQUIREMENTS.

INTERNA \ Força de Trabalho

8. INSPECTION AND TESTS

8.1. General requirements

8.1.1. PETROBRAS is entitled to inspect the package anytime during fabrication to ensure that material and workmanship are in accordance with the specifications.

8.1.2. Inspection of materials and/or equipment will be made by PETROBRAS or its authorized representatives.

8.1.3. Unless otherwise specified, all witnessed tests shall be informed, at least, 90 days before the scheduled dates.

8.1.4. Unless otherwise established by PETROBRAS inspector, all equipment shall be available for inspection in an unpainted state.

8.1.5. All control sequences and shutdown logics shall be simulated and tested against the requirements. Details of supplier standard functional test procedures shall be submitted to PETROBRAS approval.

8.1.6. PETROBRAS inspectors shall have the right to request inspections to ensure that the equipment complies with international standards, where applicable.

8.1.7. In case any defects and/or shortcomings are found, PACKAGER shall bear the full cost of such inspection and replacement as necessary. Any repair shall be approved by PETROBRAS. The subsequent inspection necessary to confirm the satisfactory results will be at PACKAGER cost.

8.1.8. For gas turbine, after factory acceptance tests, a borescope inspection shall be carried out, recorded and sent to PETROBRAS.

8.1.9. All fuel system welds shall be 100% radiographically inspected and submitted to magnetic particle examination.

8.1.10. All process gas system welds shall be 100% radiographically inspected and submitted to magnetic particle examination.

8.1.11. Hydrodynamic Bearings, if required, and DGS shall be removed by PACKAGER after Factory Acceptance Test of Compressor (FAT) or Factory Integrated Test (FIT) and package separately with clear identification to be delivered with the main equipment in a packing suitable for long term storage for posterior PACKAGER assembly.

8.2. Hydrostatic test (HT)

8.2.1. For all trains, parts being tested shall be externally coated with a layer of white lead carbonate or any other suitable powder to help leakage detection.

8.2.2. No vises or clamping devices shall be used for pressing nozzle flanges.

8.2.3. PTFE tape or thread compounds shall not be used to prevent leakage of threaded plugs and connections.

8.3. Performance Test (PT)

8.3.1. For gas turbines, Performance Test shall be performed on each unit (gas generator and power turbine) according to ASME PTC 22.

8.3.2. For compressors, Performance Test shall be performed on each unit according to ASME PTC 10 (type 2).

INTERNA \ Força de Trabalho

8.3.3. PACKAGER shall provide balance line flow meter and division wall flow measurement during performance test.

8.3.4. The performance test procedure shall be agreed with PETROBRAS.

8.4. Mechanical Running Test (MRT)

8.4.1. For gas turbines, MRT shall be performed on each unit (gas generator and power turbine) according to API STD 616.

8.4.2. For compressors, MRT shall be performed on each unit according to API STD 617 last edition.

8.4.3. PACKAGER shall submit to PETROBRAS a CD with vibration data recorded during MRT and all test information, including, at least: failed tests, with sweeping, starting/stopping ramp, equipment vibration signature, diagram for all bearing signals and phase angle versus speed.

8.4.4. The MRT procedures shall be agreed with PETROBRAS.

8.5. Sound Level Test (SLT)

8.5.1. The sound pressure meter shall be class I, according to IEC 61672. The characteristics of the octave filter shall be in accordance with IEC 61260. The sound pressure reading shall be made at equivalent continuous level, for 60 seconds of sampling time. The recorded values shall be corrected to the nearest entire value within 1dB. A maximum deviation of 2dB will be allowed, both for the A scale weighted value and for the octave bands between 31.5 Hz and 8000 Hz.

8.5.2. The procedures for sound measurement assume a condition of free field over reflecting floor. This implies that the tests will be preferably performed in an outside area, with a smooth floor made of concrete, asphalt, etc. If this condition is not satisfied, then the correction for measurements in rooms shall be applied.

8.5.3. If the difference between the background noise level and the equipment sound level plus the background is less than 10dB, the measurements shall be corrected.

8.5.4. If the normal operating condition cannot be reached in the test facilities, PACKAGER and PETROBRAS shall agree with measurements methods and values.

8.5.5. If the values measured and reported during the shop test are higher than the limits submitted by PACKAGER and approved by PETROBRAS in proposal, PACKAGER shall provide, without extra cost, sound attenuation methods in order to reach this limit, if required by PETROBRAS.

8.6. Factory Integrated Test (FIT)

8.6.1. PACKAGER shall execute FIT in their installations per compressor type. FIT shall be a functional test including the following contract parts, at least: gas generator, power turbine, gearbox, PAS, starting system, oil system (synthetic and mineral), and gas fuel system, compressors and seal systems. (REV. B)

8.6.2. The FIT procedure, with the steps and duration, shall be similar to the MRT, and shall have, at least, three starts and three stops. The test will be performed without the process plant, and therefore the compressor shall be under vacuum. It is not necessary to perform the unbalance test.

8.6.3. Vibration requirements (limits, acceptance, etc.) shall be the same used for MRT.

8.6.4. Turbine will be tested according to API-616 and PETROBRAS specification.

8.6.5. Control check shall be done during FIT, as part of a functional test.

INTERNA \ Força de Trabalho

8.6.6. The FIT procedure shall be agreed with PETROBRAS.

8.7. Site Acceptance Test (SAT)

8.7.1. Site Acceptance Test (SAT) is an offshore acceptance test to be performed when the turbocompressor is able to operate after all commissioning is complete and no issue is pending.

8.7.2. SAT shall be performed according to “Annex A” (Rotating Equipment Reliability Test).

8.7.3. INTEGRATOR shall provide all facilities, support and technical assistance for SAT. PACKAGER is responsible for any repairs required during the SAT that are not caused by factors external to the turbocompressor system.

8.7.4. The SAT procedure shall be agreed with PETROBRAS.

8.8. Post-test Inspection (PTI)

8.8.1. A gas turbine borescope test inspection shall be performed on every unit immediately after the last run prior to delivery and a report recorded in CD/DVD (movie or photo files). Dismantling, inspection and reassembling will be only required in case of unsatisfactory Mechanical Running Test (MRT), as defined in API 616, Section 8.

9. WORKING GROUP

REV. 0		
KEY	**DEPARTMENT**	**ROLE**
CL2R	BS/ATP-IMI/MIED	EXECUTION
DHG1	BS/PCM/PROJDP	EXECUTION
FBJW	BS/PCM/PROJDP	EXECUTION
FEU5	BS/PCM/PROJDP	EXECUTION
FZ35	BS/PCM/PROJDP	EXECUTION
RZA7	BS/PCM/PROJDP	EXECUTION
SGPL	SRGE/ESUP/PIES/PPP	EXECUTION
U32A	BS/PCM/PROJDP	EXECUTION
URS8	BS/PCM/PROJDP	EXECUTION
CTFQ	BS/ENGP/EEDSE	CHECK
BEGS	BS/PCM/PROJDP	APPROVAL

REV. A		
KEY	**DEPARTMENT**	**ROLE**
DHG1	BS/PCM/PROJDP	EXECUTION
FBJW	BS/PCM/PROJDP	EXECUTION
FEU5	BS/PCM/PROJDP	EXECUTION
FZ35	BS/PCM/PROJDP	EXECUTION
RZA7	BS/PCM/PROJDP	EXECUTION
SGPL	SRGE/ESUP/PIES/PPP	EXECUTION
U32A	BS/PCM/PROJDP	EXECUTION
URS8	BS/PCM/PROJDP	EXECUTION
CTFQ	BS/ENGP/EEDSE	CHECK
BEGS	BS/PCM/PROJDP	APPROVAL

REV. B		
KEY	**DEPARTMENT**	**ROLE**
FBJW	BS/PCM/PROJDP	EXECUTION
FEU5	BS/PCM/PROJDP	EXECUTION
CTFQ	BS/ENGP/EEDSE	CHECK
BEGS	BS/PCM/PROJDP	APPROVAL

INTERNA \ Força de Trabalho

REV. C		
KEY	**DEPARTMENT**	**ROLE**
FEU5	BS/PCM/PROJDP	EXECUTION
RZA7	BS/PCM/PROJDP	EXECUTION
CTFQ	BS/ENGP/EEDSE	CHECK
BEGS	BS/PCM/PROJDP	APPROVAL

10. ANNEXES

ANNEX A - ROTATING EQUIPME

ANNEX B - ADDITIONS AND MC

INTERNA \ Força de Trabalho

ANNEX A – ROTATING EQUIPMENT RELIABILITY TEST (TURBOMACHINERY UNITS)
(Rev. A)

The reliability test is intended to demonstrate that turbomachinery unit overcomes the premature failures ("burn in phase") and provide a reliable operation condition within useful life.

For such evaluation, the reliability test shall be performed for each turbomachinery unit under specific condition (test) and acceptance criteria hereafter described.

1. The test is considered concluded and accepted if the number of countable failures is zero and the accumulated (aggregated) time in service is higher than 240h;
2. If in the meantime any number of countable failures occurs, the procedure below shall be followed as mandatory (see FIGURE 1):
   a) The turbomachinery unit is considered accepted if it reaches the accumulated time in service indicated in the "Acceptance Zone";
   b) If any number of countable failures during the test achieves to the "Rejection Zone", the turbomachinery test is rejected and a root cause analysis shall be performed to identify failure mechanism and solution be implemented, turbomachinery unit repaired and the test restarted from the beginning. Both, the unit elapsed running time and number of failures shall be disregarded and a new reliability test be carried out;
   c) Nevertheless, if accumulated time in service and number of failure is within between rejection and acceptance lines the test must go on up to reach the "Acceptance Zone";
   d) The test is considered concluded as soon as it reaches the "Acceptance zone" or when it reaches 720h of accumulated (aggregated) time at most with no more than 7 countable failures.

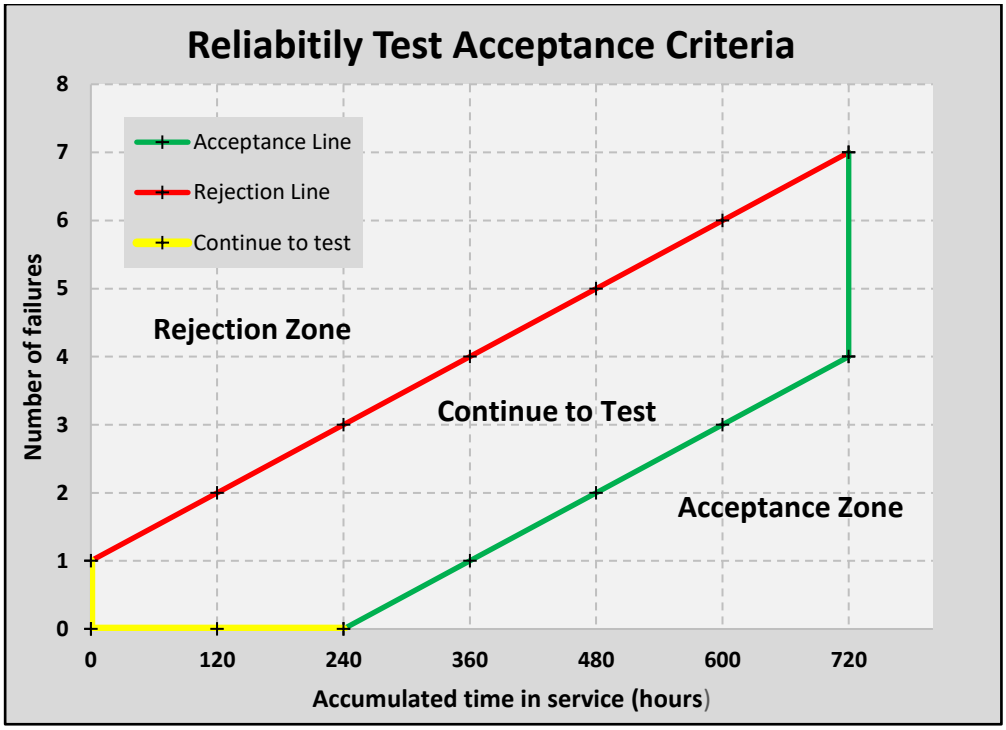

FIGURE 1: ACCUMULATED TIME VERSUS NUMBER OF FAILURES

1. Only failures occurring within the turbomachinery boundaries limits shall be considered (see FIGURES 2A, 2B, 2C, 2D and 2E). Countable failure is any event that causes complete or partial loss of system's capability of providing its expected output (see APPENDIX 1).

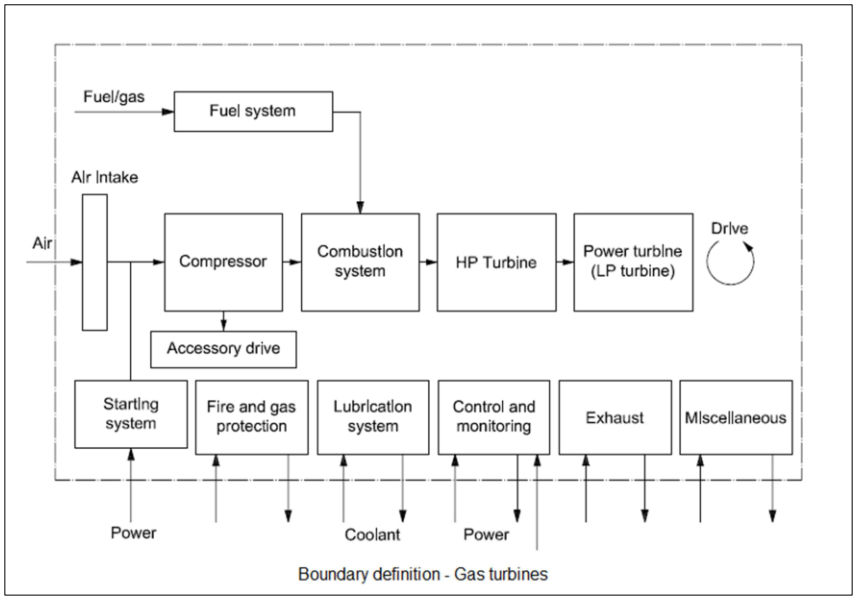

FIGURE 2A

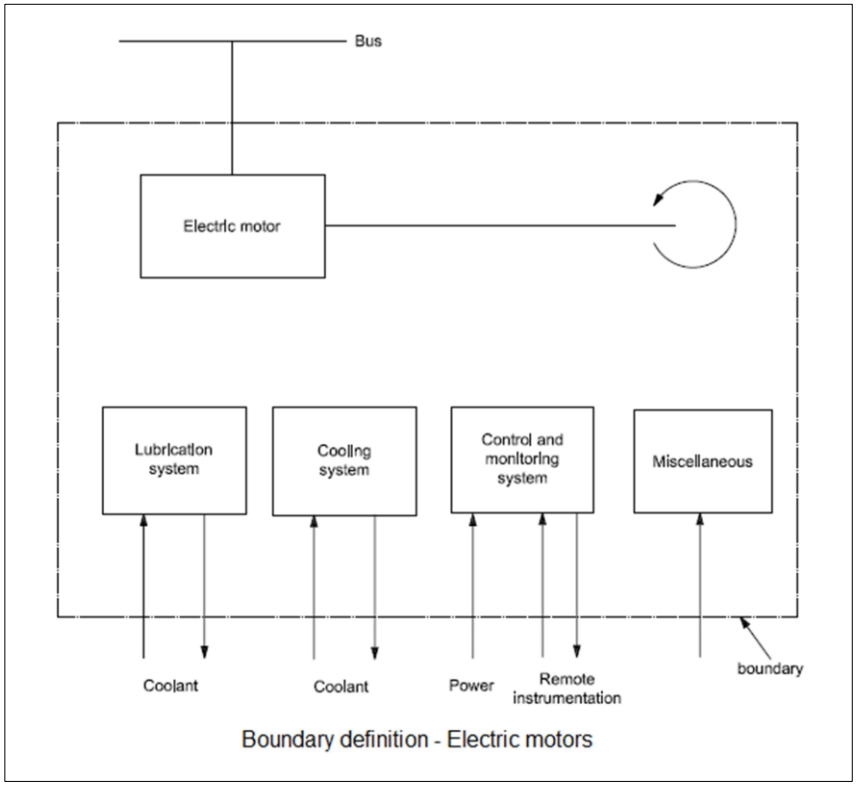

FIGURE 2B

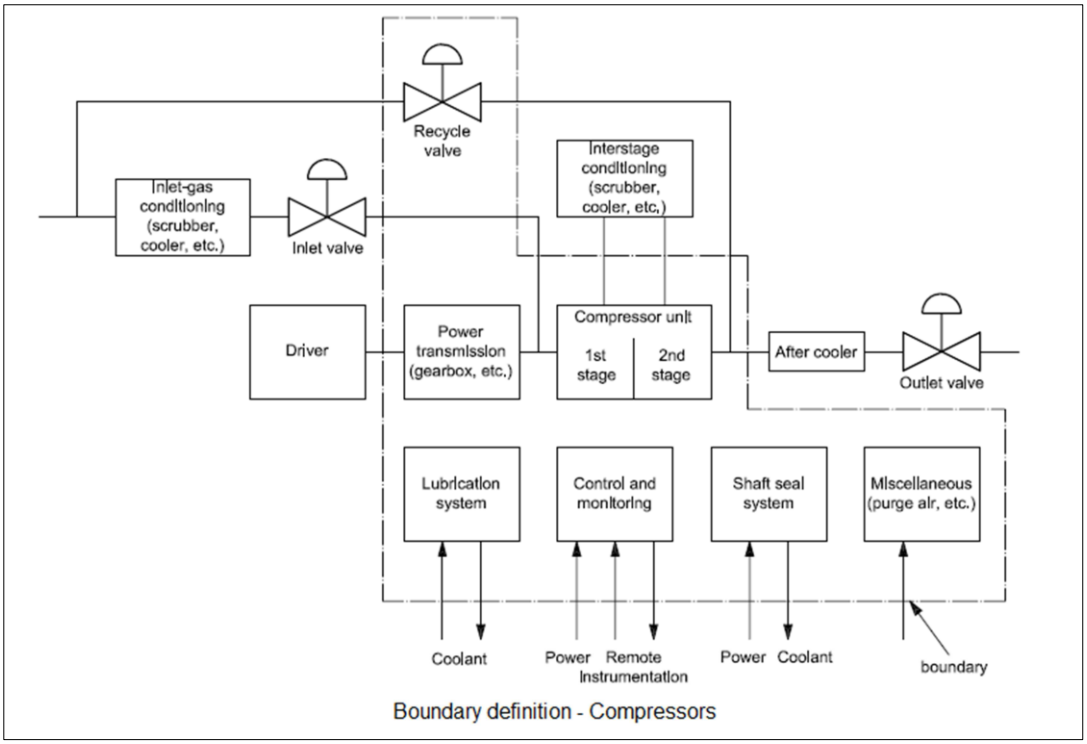

FIGURE 2C

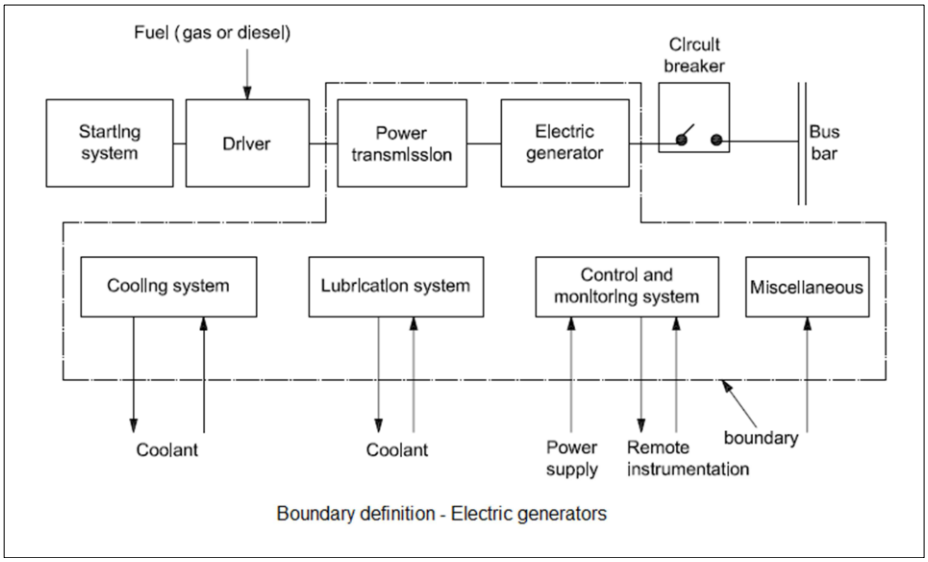

FIGURE 2D

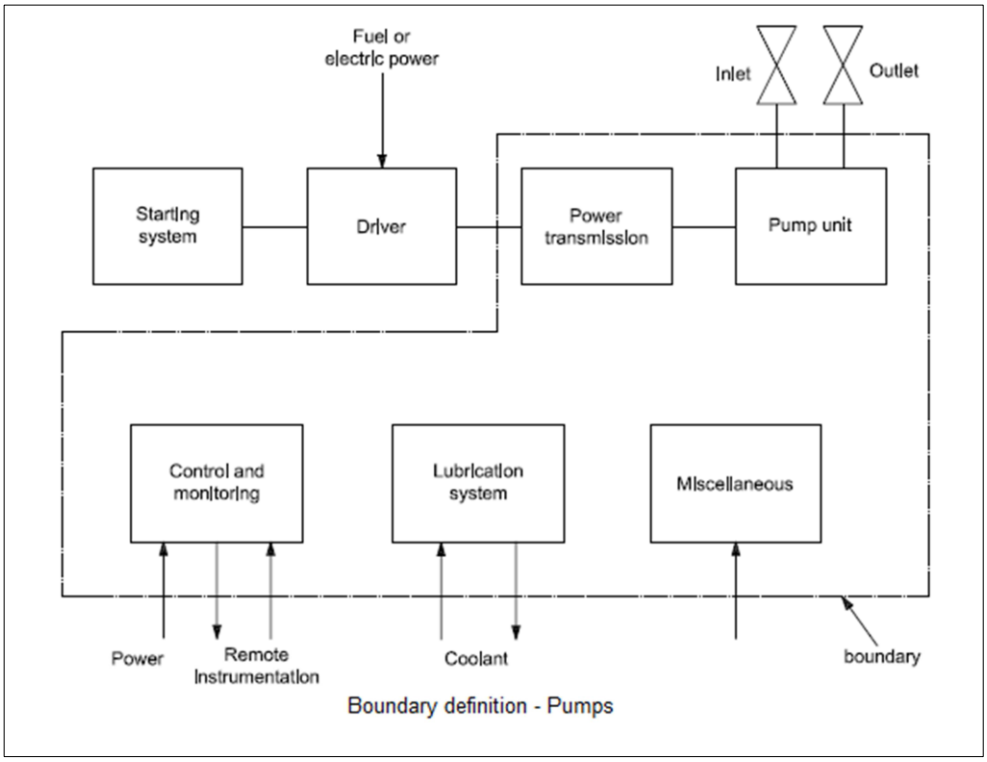

FIGURE 2E

APPENDIX 1 – COUNTABLE FAILURE TABLE

1.	Any failure resulted from faulty manufacturing or engineering for main or ancillary equipment, components or systems that demand casing disassembly, realignment, adjustment, replacement or repair of any component.
2.	Performance disturbances caused by malfunction of performance/capacity controllers, speed controllers, anti-surge controllers, protection systems, communications devices and interlocking within the package that request re-programming or re-configuration.
3.	Any repeated actuation (two consecutive or three non-consecutive events) of the same trip that request re-configuration, recalibration and re-setting of parameters.
4.	More than three unsuccessful starts in sequence demanding recalibration and re-setting of startup system.
5.	Vibration & bearing temperature levels higher than specified / contracted.
6.	Failure to stop on demanding during test sequence.

General Notes:

ANNEX A – ROTATING EQUIPMENT RELIABILITY TEST (TURBOMACHINERY UNITS)
(Rev. A)

1- Any external cause (from outside turbomachinery boundaries) that leads to the shutdown shall be disregarded. The test shall continue after restart the turbomachinery unit counting the aggregated time so far.

2- Any other occurrence that cause no immediate neither critical impact on the equipment/system function will be considered as typically non-critical failures, and therefore will not interrupt the test (abnormal instrument reading, minimum external leakage, signal transmission with intermittent disconnection, poor response to feedback, false alarm, faulty instrument indication or similar malfunction).

3- Any lack off or reduced ability to provide heating/cooling/exhausting/ventilation of auxiliary systems due to external poor sources shall be evaluate in order to not jeopardize the test result. If necessary, the test shall be interrupted up to all external sources are in steady condition.

ANNEX B - ADDITIONS AND MODIFICATIONS TO API 617

FOREWORD

This Annex is based on API Standard 617, 9th edition, April 2022. It is only written in English.

1 SCOPE

This Annex establishes the minimum conditions required for axial and centrifugal compressors, expander-compressors and their auxiliary equipment or systems, to be supplied in accordance with API Standard 617, 9th edition, April 2022.

2 SUPPLEMENTARY DOCUMENTS

The following documents are referenced in the text and contain valid rules for this Annex.

2.1 Base Standard

API Standard 617 – Ninth Edition – Axial and Centrifugal Compressors and Expander-compressors for Petroleum, Chemical, and Gas Industry Services.

3 GENERAL REQUIREMENTS

3.1 The requirements of this Annex are additions to, or modifications of the API Standard 617, 9th edition, which is an integral part of this Annex.

3.2 Except for new clauses, item numbers used in this Annex are the same API Standard 617, 9th edition paragraph ones.

3.3 PACKAGER is responsible to relate each deviation from API Standard 617, 9th edition. All deviations from new/modified paragraphs from the requirements in this Annex and/or API Standard 617, must be clearly identified in the proposal and submitted to PETROBRAS for approval. Any requirement exception or deviation from any of the listed documents not clearly mentioned in tender will be considered by PETROBRAS as full compliance with the material requisition.

3.4 All deviations from the contracted design or scope of supply made by vendor during time of drawings and documents review shall be clearly mentioned in the particular document to be approved.

3.5 Vendor’s compliance with the requirements of these specifications does not exempt him from the responsibility of supplying equipment and accessories suitable for the specified service conditions.

3.6 Compressors and auxiliary equipment shall be in accordance with API Standard 617, 9th edition, plus the following changes, as noted in parenthesis for each clause, according to the definitions stated below. The information of each clause shall be read as follows, whenever starting with:

Addition:	Continuation of that particular API Standard 617 paragraph
Modification:	Replacement of part of that affected API Standard 617 paragraph
Substitution:	Replacement of that API Standard 617 paragraph in its entirety
New:	Insertion of a requirement not found in API Standard 617

ANNEX B - ADDITIONS AND MODIFICATIONS TO API 617

Deletion: Removal of that particular API Standard 617 paragraph

Comment: Clarification or interpretation on that API Standard 617 paragraph

4 PETROBRAS CHANGES TO API STANDARD 617, NINTH EDITION

Note - From this point onwards the numbering of the items refers to the corresponding item of the API 617 standard.

ANNEX B - ADDITIONS AND MODIFICATIONS TO API 617

PART 1- GENERAL REQUIREMENTS

6.1.3.16 (New)

Compressor components that are very similar among each other (such as impellers, shafts, seals and seal glands, sleeves, diffusers and casings) shall be indelibly identified with the order of assembly and to which sub-set they belong to (e.g.: stage number, suction side, coupling end, etc). Lifting lugs or eyebolts shall be provided for any equipment or component that weights more than 30 kg (66 lb). Precision assembly components (such as bearing housings, bearings, seals, diffusers, diaphragms, couplings, etc.), regardless of weight, shall always be fitted with suitable provisions to facilitate assembly / disassembly activities or any other maintenance task.

6.4.4.1 (Substitution)

Threaded connections are only acceptable for air, inert gas or water. Threaded openings for tapered pipe threads shall conform to ASME B1.20.1.

6.4.4.2 (Substitution)

Pipe threads shall be taper thread conforming to ASME B1.20.1.

6.8.1.6.2 (Substitution)

Unless otherwise specified, the reporting requirements identified as required for independent audit of the results shall be provided.

6.8.1.6.3 (Substitution)

Provisions shall be made to provide the purchaser with access to drawings to develop independent models of the rotor, bearings, and seals.

6.8.1.7.2 (Substitution)

Unless otherwise specified, the data requirements identified for independent audit of the results shall be provided.

6.8.1.7.3 (Substitution)

Provisions shall be made to provide the purchaser with access to drawings to develop independent models of the rotors.

6.8.2.4 b (Addition)

The clearance ranges to be used in the analysis shall be:
minimum bearing clearance and maximum preload, calculated using maximum pad, minimum bearing and maximum shaft radius;
average bearing clearance and preload, calculated using mean pad, bearing and shaft radius;
maximum bearing clearance and minimum preload, calculated using minimum pad, maximum bearing and minimum shaft radius;
these calculated coefficients for the speed range shall be presented in the damped unbalance response analysis report. Bearing circumferential temperature profile shall also be included.

ANNEX B - ADDITIONS AND MODIFICATIONS TO API 617

6.8.2.4 c (Addition)

The pad inertia and thermal effects, convection and pad conduction shall also be considered.

6.8.2.7 (Modification)

Replace first sentence by:
A separate damped unbalance response analysis shall be conducted for each critical speed in the range from ZERO to trip speed, as well as the next mode occurring above the trip speed.

6.8.2.8.2 (Substitution)

Any test stand parameters that influence the results of the analysis shall be included, such as actual bearing clearances used during the test and pedestal stiffness. If the chosen location of the unbalance does not excite the critical(s) of concern, the unbalance shall be placed in the plane(s) that would excite the critical most adversely.

6.8.2.9 a (Substitution)

If the AF at a particular critical speed outside the operating speed range is less than 2.5, the response is considered critically damped and no separation margin is required (SMr = 0). However, even though amplification factor calculations for a given rotor may indicate critically damped response and then no separation margin would be required, critical speeds within the operating speed range will only be accepted if the vendor can demonstrate that all efforts to remove the critical speed from the operating speed range have been exhausted.

6.8.2.11 (Modification)

Replace Equation (9) by:

$S_{cc} = A_{vl} / A_{max}$

6.8.2.11.3 (Addition)

For machines with abradable seals, the rotor response amplitudes, corrected in accordance with 6.8.2.11 at any speed from zero to trip speed shall not exceed 100 % of the minimum design diametral running clearances throughout the machine.

6.8.3.1.11 (Addition)

If, after vectorial subtraction, the unbalance mass does not change the vibration at critical speed in more than 2.5 µm (0.1 mil), then the unbalance weight shall be increased and the test shall be repeated.

6.8.4.3 (Addition)

All components shall be analyzed using the extremes of the operating limits for clearance and oil inlet temperature and pressure, to produce the minimum log decrement.

6.8.4.4 (Substitution)

When tilt pad journal bearings are used, the analysis shall be performed with full pad dynamic coefficients.

ANNEX B - ADDITIONS AND MODIFICATIONS TO API 617

6.8.4.11 (Substitution)

All the operating conditions defined for the complete operational range (including surge and choke conditions) shall be extrapolated to both N_{ma} and N_{mc} within the operating map.

6.8.5.1 (Substitution)

The stability analysis shall indicate that the machine, as calculated in 6.8.4.14 d), shall have a final log decrement, δf, greater than 0.2.

6.8.5.2 (Substitution)

A stability test, to measure damping ratio (and to determine the corresponding log decrement), shall be performed in accordance with item 8.3.8 if one of the following conditions is satisfied:
a) the machine fails to meet the criteria specified in item 6.8.5.1;
b) the test has been specified in compressor data sheet.

NOTE Some particular applications which have not proven rotordynamic design may require special consideration in determining the actual compressor damping ratio (thus demanding stability test to be performed), such as CO2 injection, high-pressure and high-density gases, etc.

6.8.6.2 (Substitution)

For direct driven turbine trains, the vendor shall perform a torsional vibration analysis of the complete coupled train and shall be responsible for directing any modifications necessary to meet the requirements of 6.8.6.3 through 6.8.6.8.

6.8.7.6.7 (New)

After completion of final balancing, all major elements of the assembled rotor shall be match marked. Balance quality data (as designed / as final) for all rotating equipment and components shall be provided in the installation, operation and maintenance manuals and other applicable documents.

6.8.8.5 (Substitution)

The operating speed drive assembly shall be shown to have an effect less than 25% of the balance tolerance. Job-coupling half moment shall be simulated either by means of the facility drive coupling and adapter or by means of the job-coupling hub with moment simulator.

6.8.9.2 (Substitution)

At any speed greater than the N_{mc}, up to and including the trip speed of the driver, the vibration level shall not exceed 12.7 µm (0,5 mil) above the value recorded at the maximum continuous speed for each probe or half of the value from Equation (12), whichever is less.

8.3.5.3.1 (New)

Shop test facilities shall also include a dedicated station fully available for PETROBRAS use, and capable of handling and analyzing all real time data collected during all tests.

ANNEX B - ADDITIONS AND MODIFICATIONS TO API 617

8.3.5.3.2 (New)

The shop vibration equipment used during the tests shall be configured in accordance with Annex J (Normative) of this document. All cables shall be identified. In case of ADRE system is not used for data collecting and monitoring during shop tests, then visualization software (or translation into ADRE format files) shall be provided as well.

8.3.5.10.4.2 (Substitution)

The speed range covered by these plots shall be from slow roll to trip speed and from trip speed to slow roll.

8.3.5.10.4.3 (Substitution)

These data shall also be furnished in polar form.

8.3.5.10.6 (Substitution)

The following seal flow data shall be taken during the compressor mechanical running test (MRT) and performance test (PT) to ensure that the seals are installed and operating properly:

a. For compressors with oil seals, inner oil leakage, pressure and temperature shall be measured at each seal;
b. For single dry gas seals, flow, pressure and temperature in each vent line from each seal shall be measured. If a buffer gas seal is used, injection flow, pressure and temperature for each seal shall also be measured;
c. For tandem dry gas seals, flow, pressure and temperature in the primary and secondary vent line from each seal shall be measured. If a buffer gas for primary and secondary seal is used, injection flow, pressure and temperature for each seal shall also be measured;
d. For double dry gas seals, the pressure, temperature and total flow to each seal shall be measured.

8.3.5.10.6.1 (New)

The guaranteed static seal leakage shall be checked during the assembled compressor gas leakage test.

8.3.5.10.7 b) (Substitution)

The following cases shall be verified during the 4-hour test:

— high lube oil pressure & high lube oil temperature;
— high lube oil pressure & low lube oil temperature;
— low lube oil pressure & high lube oil temperature;
— low lube oil pressure & low lube oil temperature.

Oil conditions change test shall be done during the four-hour mechanical running test, but not before all test parameters and variables are considered to be stable or steady enough to proceed.

8.3.5.10.8 (Addition)

The limit used for bearing metal temperature during the test shall be corrected accordingly.

ANNEX B - ADDITIONS AND MODIFICATIONS TO API 617

8.3.5.11.1 (Addition)

Details of inspection techniques and acceptance criteria shall be agreed upon prior to commencement between the purchaser and supplier.

8.3.5.12 (Substitution)

Shaft end seals shall be removed for inspection following a successful running test. If required by initial visual inspection, at the purchaser's discretion, dry gas seals shall be returned to seal manufacturer's facility for complete disassembly inspection.

8.3.7.9 Spare-parts Test (Substitution)

Spare parts such as rotors, bearings, and seals shall be inspected and tested under the same requirements of main components. Equivalent reports shall be issued as well. Spare rotors need not be performance tested, except when complete spare bundles are purchased. Complete spare bundles shall be performance tested using the same procedure as the main bundle.

8.3.8 (New) Stability Test

The purpose of this entire new item is to provide the minimum requirements for the execution of a Factory Stability Test (FST), in order to measure the actual stability margin of the machine, identifying the sister modes (forward and backward) and their respective log decrements. The log decrement shall be measured, at least, in two different operational conditions, in order to plot the measured actual applied cross-coupled stiffness vs. Log decrement and the extrapolated produced curve, to the minimum log decrement at worst design conditions (see item B.1.j Part 1).

The presentation of the results shall include a plot of applied cross-coupled stiffness vs. Log decrement, showing the measured values and the expected values for similar conditions.

Equipment shall be tested in accordance with 8.3.8.1 through 8.3.8.6.

8.3.8.1 (New) Methods & Procedures

The manufacturer shall specify in the FST procedure which kind of excitation is intended to be applied, which measurement devices to be used during the FST and how the test execution sequence has been planned. The type and direction of the excitation shall be fully described as well, including whether it would be directional (horizontal or vertical) or circular (forward or backward). It is purchaser understanding that there are several methods to apply excitation and to measure the required data, as below.

8.3.8.1.1 (New) Excitation Methods

Impact exciters such as a hammer, bearing casing exciter or an Active Magnetic Bearing (AMB) exciter shall be used to excite the rotor. The excitation using an AMB could also be an impact or a sine sweep (blocking type or conventional).

8.3.8.1.2 (New) Measurement Techniques

The measurement techniques can be applied in the frequency domain or in time domain. In any of the methods, the approach to estimate the forward and backward modes and respective log decrements shall be using multiple degrees of freedom (MDOF). The method employed

shall provide acceptable results even in case of the following difficulties or abnormalities (but not limited to):

a) rotor system anisotropy;
b) slightly damped systems (the method must render an acceptable damping ratio estimation);
c) limitations on the number of input and output locations;
d) noise and /or internal sources of excitations, such as rotor unbalance.

Due to the proximity of modes in the rotating systems, the Single-Degree of Freedom (SDOF) technique is not acceptable. The methods that lead to the best results are the PEM (Predicted Error Method) for frequency domain and MOBAR (Multiple Output Backward Auto Regression) for time domain.

Any other applicable methodology, rendering acceptable results even in case of above-mentioned system characteristics, such methodology shall be fully described (type of load, application of load, measurement techniques, interpretation of results, definition of model order, etc.) and demonstrated (list of experience with similar designs, results and comparison with actual data). Methodologies shall be submitted to purchaser for review and approval.

8.3.8.2 (New) Definitions

The stability of the machine shall be measured in two different operating conditions as defined in 8.3.8.2.1 and 8.3.8.2.2.

8.3.8.2.1 (New) Base Stability

The Base Stability is defined as the measured stability with the machine running with zero internal cross-coupling. This can be most closely achieved with the rotor running on High Speed Balancing Machine or running during the Mechanical Running Test, preferably under vacuum, which may be done during HSB at HSBM, or at Test Bed during Mechanical Running Test (MRT) or Performance Test (PT).

The Base stability shall be measured at maximum continuous speed - N_{mc} - and at Performance test speed (if Performance test speed is different than N_{mc}). The procedure for applying the excitation shall be according to item 8.3.8.5.

8.3.8.2.2 (New) Measurement During Pressurized Test

The stability measurement during the Pressurized Test is defined as the measurement of the log decrement of the machine for a specific cross-coupling, calculated taking in account the pressure and speed during the test, for one chosen point. The Pressurized Test may be a performance test according to ASME PTC-10 or a full pressure test (if specified).

For an ASME PTC-10 type II test, the procedure shall consider the following premises:

a) after determination of the first surge point, the capacity flow rate shall be increased in order to remain in safe region;
b) there shall be a delay, waiting for system stabilization (pressures, temperatures, flow rates, bearing temperatures and shaft centerline);
c) the test conditions shall be chosen by manufacturer such that estimated cross-coupling be, at least, 20% of the cross-coupling calculated according to item 6.8.4.14 d. For boundary conditions where such margin cannot be accomplished, the test point shall be the highest feasible;
d) the excitation shall be started as per item 8.3.8.5.

For an ASME PTC-10 type I test or full pressure test, the procedure shall consider the following premises:

a) maximum pressure shall be achieved. Purchaser and the manufacturer may agree and define other intermediate points;

b) there shall be a delay, waiting for system stabilization (pressures, temperatures, flow rates, bearing temperatures and shaft centerline);

c) the excitation shall be started as per item 8.3.8.5.

8.3.8.3 (New) Preparation for the Test

8.3.8.3.1 (New)

When an active magnetic bearing is used for the excitation, its assembly on the shaft shall not significantly change the rotor response characteristics. The manufacturer shall submit for purchaser approval the proposed device and the expected changes in the rotor response prior to the test.

The equipment measured unfiltered vibration, during the mechanical running and performance tests, with the assembled device, before applying any load, shall not exceed the limits of item 6.8.9.1.

The manufacturer shall send a procedure informing how the AMB will be adjusted/calibrated and how the applied force will be measured. Prior to the tests, the accuracy of input force measurements shall be verified. The manufacturer shall submit the AMB calibration report for purchaser review.

8.3.8.3.2 (New)

The manufacturer shall present, prior to the test, the calculated log decrement for the forward and backward modes at actual test conditions (Qf), such as bearing clearance, preload and test speed (for ASME PTC-10 type II test, the test speed may be different from maximum continuous speed).

8.3.8.3.3 (New)

The data collect system shall consist as a minimum of an Oscilloscope, a Real Time Analyzer and a Data Recorder (analog or digital) with capability of continuously collecting all probes data and input signals. The sampling rate of the system shall be enough to identify the excitation frequencies and the results.

8.3.8.3.4 (New)

The manufacturer shall present in the lateral vibration report, the expected orbits for both modes (forward and backward) at N_{mc}, from zero to the maximum expected cross-coupling (0 %, 50 %, 100 %) for the average clearance case. The definition of excitation direction shall be based in those orbits.

8.3.8.3.5 (New)

If a sine sweep method is used to identify the actual forward and backward frequencies, the frequency interval of each sine sweep shall be less or equal to 0.25 Hz.

ANNEX B - ADDITIONS AND MODIFICATIONS TO API 617

8.3.8.4 (New) Signal Quality

8.3.8.4.1 (New)

In order to have good response when applying the excitation, the Signal to Noise Ratio (SNR) shall be at least two. The amplitude of excitation shall be controlled in order to not exceed an agreed amount of bearing clearances for safety and linearity concerns.

8.3.8.4.2 (New)

If the manufacturer decides to apply filtering to eliminate the synchronous response, the type of filter shall be informed to Purchaser. The design of the filter shall not influence the signal components of interest.

8.3.8.5 (New)

Any measured point (forward and backward) shall be calculated from an average of at least five readings. These five readings shall be in the range of:

$\delta_m - 0.03 \leq \delta_i \leq \delta_m + 0.03$, where

$$\delta_m = \frac{\delta_1 + \delta_2 + \delta_3 + \delta_4 + \delta_5}{5}$$

If any value falls outside the above defined range, it shall be discarded and measured again.

The average value (δ_m) will be used to compare with the predicted values.

8.3.8.6 (New) Acceptance Criteria

8.3.8.6.1 (New) Model Verification

If the measured value is above the predicted one, no correction in the model is necessary.

The vendor shall correct the model if it fails to meet the following criteria:

Any expected log decrement for the forward mode, for both cases (base stability and performance test conditions), calculated according to 8.3.8.3.2, shall be inside the range of the measured log decrement (δ_m ± 0.03).

8.3.8.6.2 (New) Test Acceptance

The highest difference between the expected value and the measured log decrement (δm) for each case (base stability and pressurized test conditions) will be the correction factor (δcc) to be applied to the calculated log decrement (δf) for the worst condition (see item B.1.j Part 1) at maximum continuous speed and design pressure (see figure below).

The equipment acceptance criteria shall be that the final corrected log decrement ($\delta f'$), at worst condition (see item B.1.j Part 1), is greater than 0.1.

ANNEX B - ADDITIONS AND MODIFICATIONS TO API 617

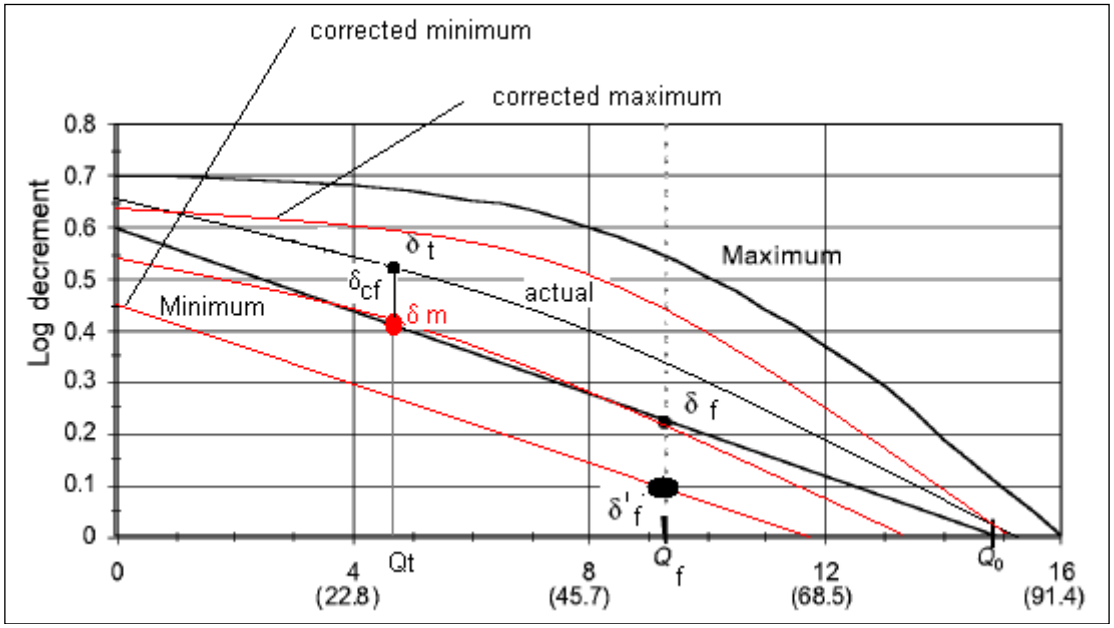

Figure 1 - Applied Cross-Coupled Stiffness, Q KN/mm (Klbf/in.)

Where:
Qt: calculated cross-coupled stiffness at test conditions (see 8.3.8.3.2);
Qf: calculated cross-coupled stiffness at maximum continuous speed, design pressure and worst conditions (see item B.1.j Part 1).

NOTE The example in the curve above is only illustrative; no curve shape correction will be applied.

8.4.3.12.3 (Substitution)

After testing and final inspections, spare rotors shall be wrapped, packed in steel export-type API Std 687 containers, sealed and pressurized / purged with Nitrogen gas. Containers shall be provided with N2 pressure indication, vent, drain and refill connections and shall be equipped with a pressure safety valve and a Nitrogen cylinder and pressure control valve, to ensure adequate Nitrogen pressure inside the storage container. Container design shall be suitable for both horizontal and vertical storage.

Annex B.1.j.4) (Substitution)

Figure B.2 plot of log decrement, δ, vs cross coupled stiffness for minimum and maximum bearing clearances, combined with the two extremes of oil temperature and pressure (minimum pressure with maximum oil temperature, and minimum temperature with maximum oil pressure);

NOTE The minimum and maximum bearing clearances to be used in the analysis shall be:
Minimum bearing clearance and maximum preload, calculated using maximum pad, minimum bearing and maximum shaft radius;
Maximum bearing clearance and minimum preload, calculated using minimum pad, maximum bearing and minimum shaft radius.

Annex I.2.3 q (Addition)

Compressor vendor and/or seal manufacturer shall note on the proposal data sheets the expected and guaranteed maximum leakage rates of the quoted seal, both at shop testing (with test gas) and at job site (with specified gas) under rated operating conditions.

ANNEX B - ADDITIONS AND MODIFICATIONS TO API 617

Annex I.3.6.2.1 (Substitution)

All information required for the proper installation and commissioning of the equipment shall be compiled in a manual.

Annex I.3.6.2.2 (Substitution)

It shall be separate from the operation and maintenance instructions.

Annex I.3.6.2.3 (Substitution)

This manual shall contain all necessary information for performing the activities comprised from the time of equipment jobsite receiving up to the pre-operation, including at least, but not limited to, the following procedures:

a) equipment receiving, storage and preservation (including auxiliaries, spare parts and shipped loose items);
b) rigging;
c) equipment leveling, shaft alignment and grouting;
d) auxiliary systems installation;
e) lube oil system flushing;
f) piping cleanliness;
g) equipment operational acceptance tests.

ANNEX B - ADDITIONS AND MODIFICATIONS TO API 617

ANNEX J (Normative)

The shop vibration equipment shall use the following minimum configuration during the tests. This configuration shall be stated in the test procedure and shall be checked before starting the test. SI units shall be used in the configuration.

1. Each channel shall be configured according to the contracted vibration probes, considering the following:
   - Transducer type;
   - Full scale range;
   - Scale factor considering the probes sensing area material.

2. Each channel shall be configured according to the probe mounting position and its tag number. Regarding the orientation, API 670 shall be followed.

3. A bandpass filter shall be configured considering high – 1 Hz and low – 1500 Hz.

4. Data shall cover a frequency range from 0.05 to 8 times the N_{mc}. Spectra shall be displayed with 1 Hz/line or less.

5. Data shall be recorded considering a speed variation of 10 RPM or less.

6. Data shall be recorded considering a time variation of 5 seconds or less.

7. Data shall be recorded considering a minimum of 10 static samples per waveform.

The recording instrumentation resolution shall be at least 1.25 µm (0.05 mils).