THE DRAWINGS AND THE INFORMATION CONTAINED HEREIN ARE THE PROPERTY OF KOBE STEEL, LTD. THEY SHALL NOT BE LOANED, NOR BE DISCLOSED, REPRODUCED OR USED IN ANY MANNER WITHOUT PRIOR WRITTEN CONSENT OF KOBE STEEL, LTD.

3RD ANGLE PROJECTION

COMMERCIAL TOLERANCE (MACHINED)	
DIVISION OF DIM.	MEDIUM
≦ 6	0.5 ±0.1
6 ≦ 30	±0.2
30 ≦ 120	±0.3
120 ≦ 315	±0.5
315 ≦ 1000	±0.8
1000 ≦ 2000	±1.2

REMARKS
1. MARKING OF "○" AND "□" SHOW PART NO. AND WELDED JOINT NO. RESPECTIVELY.
2. -11°C AND -29°C ARE MINIMUM DESIGN METAL TEMPERATURE PER ASME SEC. VIII Div. 1.
3. DESIGN PRESSURE MEANS MAXIMUM ALLOWABLE WORKING PRESSURE PER ASME SEC. VIII Div. 1.
4. REFER TO DETAIL DOC. NO. 1-ET-4150.50-1230-940-KSL-023

ITEM	PART NAME	MATERIAL	REMARKS
55	EARTH LUG	SB-209 5083-O	T 6
54	GASKET	SPIRAL WOUND	Filler:Flexible Graphite Ring :Aluminum Th'k:4.5 Inner Outer Ring : 304SS
53	HEX. NUT	A194GR. 2H	1 3/4"-8UN
52	STUD BOLT	A193GR. B7	1 3/4"-8UNx270 ②
51	COMPANION FLANGE	A105	ASME B16.5 600LB 14" WN-RF
49	INSULATION	URETHANE BLOCK	REMARKS 4 ②
48	INSULATION	URETHANE BLOCK	REMARKS 4 ②
47	NAME PLATE BRACKET	SB-209 5083-O	T 4
46	P A D	SB-221 5083-H112	T 4
45	LIFTING LUG	SB-209 5083-O	~~t25~~ T30 ①
44	P A D	SB-209 5083-O	T15
43	P A D	SB-209 5083-O	T25
42	R I B	SB-209 5083-O	T10
41	SUPPORT	SB-221 5083-H112	C200x90x10x15.5
27	FLANGE	SB-247 6061-T6	ASME B16.5 300LB 16" WN-RF
26	FLANGE	SB-247 6061-T6	ASME B16.5 600LB 14" WN-RF
25	NOZZLE	SB-209 5083-O	16"x T15
24	NOZZLE	SB-241 5083-O	14"xSch120
23	BACKING STRIP	SB-221 5083-H112	T4
22	HEADER	SB-209 5083-O	T20
21	HEADER	SB-209 5083-O	T40
7	SIDE PLATE	SB-209 3003-O	T5
6	SEPARATE PLATE	SB-209 3003-H14+ SFA-5.8 BAl Si-T	VPS2009C
5	SIDE BAR	SB-221 3003-H112	V1SB64W36
4	F I N	SB-209 3003-O	64PF42070E
3	F I N	SB-209 3003-O	64ST42070
2	F I N	SB-209 3003-O	64SR13030
1	F I N	SB-209 3003-O	64ST14050

MATERIAL LIST

NR-13 CLASSIFICATION		CLASS A, CATEGORY II	
INSULATION TH'K (mm)		~~88~~ 89 ②	
NOZZLE SIZE	OUT	14"xSch120	16"x T15
	IN	14"xSch120	16"x T15
FIN TYPE		64ST14050	64SR13030
NO. OF PASSAGE		110	112
FREE FLOW AREA	m²	0.3872	0.4877
RADIO GRAPH (BUTT WELD)		100%	
OPER. WEIGHT	kg	5600	
EMPTY WEIGHT	kg	5200	
CORR. ALLOW	mm	0	
AIR LEAKAGE TEST PRESS.	kg/cm²G	82.0	29.0
PNEUM. TEST PRESS.	kg/cm²G	—	—
HYDR. TEST PRESS.	kg/cm²G	106.6	37.7
DESIGN TEMP. (REMARKS 3.)	°C	-11~+65	-29~+65
DESIGN PRESS. (REMARKS 3.)	kg/cm²G	82.0	29.0
FLUID		NATURAL GAS	DRY GAS
STREAM		A (9)	B (28)
CODE		ASME SECTION VIII Div. 1 1998 EDITION 1999 ADDENDA WITH NATIONAL BOARD REGISTRATION CODE STAMP:NO	

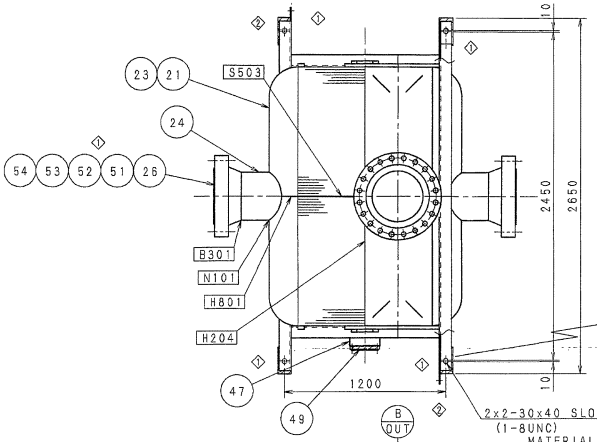

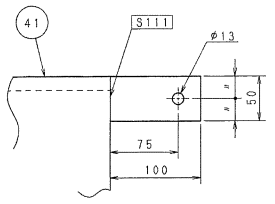

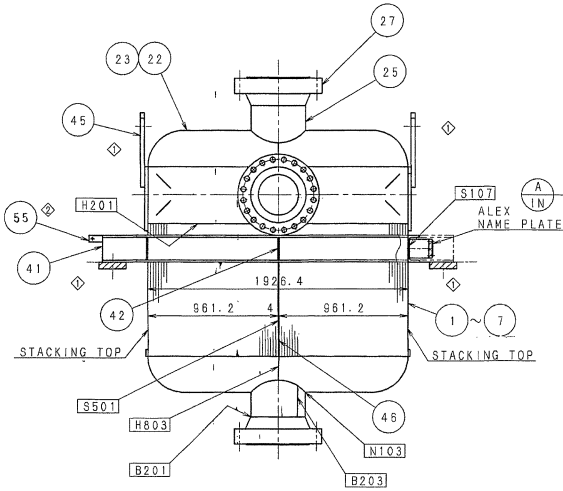

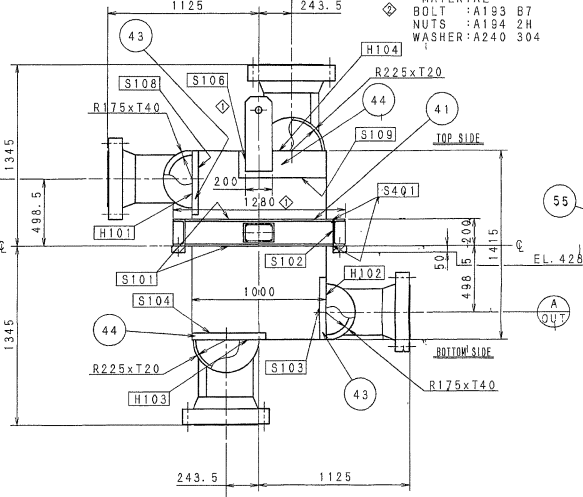

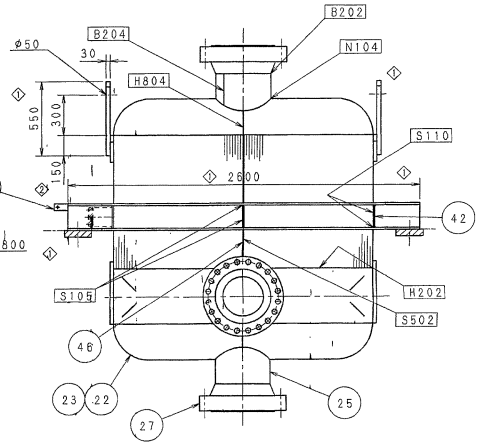

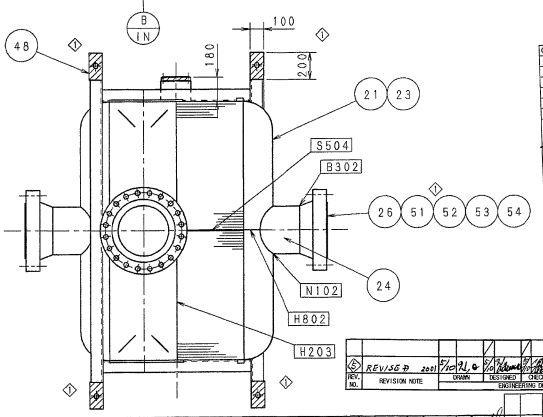

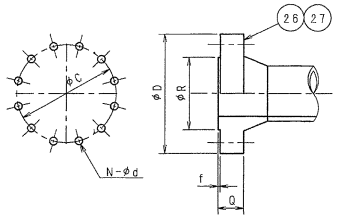

STREAM	PART NO.	φD	φR	Q	f	φC	N-φd
A IN	26	503.3	412.8	108.4	6.4	527.1	20-φ38.1
A OUT							
B IN	27	647.7	469.9	~~120.6~~ ◇88.6	1.6	571.5	20-φ35.1
B OUT							

DETAIL OF FLANGE DIMENSION

CGP PROJECT
V APPROVED
APPROVED AS NOTED
NOT APPROVED
REVIEWED
NOT BE RETURNED
Outgoing Date :
ORIG
PM
Received Date : 14.JUL.00
TOYO ENGINEERING CORP.

FINAL

REV. NO.	REVISION NOTE	DRAWN	DESIGNED	CHECKED	APPROVED	APPROVED
5	REVISED 2001	5/21	5/21	—	—	—

ENGINEERING DEPARTMENT / QA DEPARTMENT

REV.	DESCRIPTION	DSGN	CHK	APROV	PM	ISSUE	DATE

THIS DOCUMENT IS THE PROPERTY OF PETROBRAS AND IT IS PROTECTED IN ACCORDANCE WITH PREVAILING LAW. IT SHALL ONLY BE USED FOR THE PURPOSE IT IS DELIVERED.

CONSORTIUM: TOYO / SETAL CONSTRUCTORS
TOYO WORK No. BA-0491-52 TOC / SII SETAL WORK No. 0-4480
CONTRACT: TOYO N°:
RESPONSIBLE: REG./CREA:

PETROLEO BRASILEIRO S.A. PETROBRAS
SERVIÇO DE ENGENHARIA SEGEN

USER: TRANSPETRO/DTSE/GEMAC
JOB: CABIUNAS GAS PROCESSING AND TRANSFER PROJECT
UNIT: NGL RECOVERY (U-206)
TITLE: P-20603 2nd GAS x GAS EXCHANGER ASSEMBLY DRAWING

DESIGN BY	DRAWN BY	CHECK	APPROVAL
H.O	H.Odawara	S.Okamoto	S.Natani

SCALE 1 / 20 | DRAWING | SHEET 1 of 1
DATE 4.JUL.2000 | N° 1-DE-4150.50-1230-940-KSL-002

REV.	REVISED PURCHASER'S DWG.	DRAWN	DESIGNED	CHECKED	APPROVED	APPROVED
4	REVISED	4. DEC 2000 H. ODAWARA	2/6	12/4 H. ODAWARA	12/4	12/5 M. GOTO
3	REVISED	15. NOV 2000 H. ODAWARA	2/6	11/4 H. ODAWARA	11/4	11/5 T. NATANI
2	REVISED	25. OCT 2000 H. ODAWARA	2/6	10/4 H. ODAWARA	10/4	10/5 T. NATANI
1	REVISED	5. SEP 2000 H. ODAWARA	9/5	9/4 H. ODAWARA	9/5 S. OKAMOTO	9/5 M. GOTO
		4. JUL 2000 N. ODAWARA	7/4	7/4 H. ODAWARA	7/4 S. OKAMOTO	7/4 S. NATANI

REV. NO.	REVISION NOTE	DRAWN	DESIGNED	CHECKED	APPROVED	APPROVED
			ENGINEERING DEPARTMENT			QA DEPARTMENT

MAS.	SEQ NO.	COMPO. DWG. NO	T. NO.	ITEM	PART NAME	MATERIAL	QUA.	DIA.	kg CAL'D MASS/PIECE	PRO.	REMARKS	TEST PIC	TEST PIC
		PART CODE											

CAREER

NAME: CGP PROJECT P-20603 2nd GASxGAS EXCHANGER ASSEMBLY DRAWING

KOBELCO — KOBE STEEL, LTD. ENGINEERING & MACHINERY DIVISION ENGINEERING DEPARTMENT

DWG. NO. AX2094 REV. ⑤

SCALE	SECT. CODE	SUB ASSY. INDEX	OUT PUT	Q. NO.	T. NO.
1/20	73C			99-66814-B	1-498813

MF 3回 0012.06 MF 2回 0011.15 MF 1回 0010.26