3RD ANGLE PROJECTION

THE DRAWINGS AND THE INFORMATION CONTAINED HEREIN ARE THE PROPERTY OF KOBE STEEL, LTD. THEY SHALL NOT BE DISCLOSED, REPRODUCED OR USED IN ANY MANNER WITHOUT PRIOR WRITTEN CONSENT OF KOBE STEEL, LTD.

COMMERCIAL TOLERANCE (MACHINING)	
DIVISION OF DIM.	MEDIUM
≤ 6	±0.1
≤ 30	±0.2
≤ 120	±0.3
≤ 315	±0.5
≤ 1000	±0.8
≤ 2000	±1.2

REMARKS
1. MARKING OF '○' AND '□' SHOW PART NO. AND WELDED JOINT NO. RESPECTIVELY.
2. -46°C, -65°C AND -51°C ARE MINIMUM DESIGN METAL TEMPERATURE PER ASME SEC. Ⅷ Div. 1.
3. DESIGN PRESSURE MEANS MAXIMUM ALLOWABLE WORKING PRESSURE PER ASME SEC. Ⅷ Div. 1.
4. REFER TO . . DETAIL DOC. NO. I-ET-4150.50-1230-940-KSL-023

ITEM	PART NAME	MATERIAL	REMARKS
65	EARTH LUG	SB-209 5083-O	T 6
64	GASKET	SPIRAL WOUND	Filler:Flexible Graphite Hoop :Aluminum Th t:4.5 Inner Outer Ring : SS410
63	HEX. NUT	A194GR. 2H	1³/₈"-8UN
62	STUD BOLT	A193GR. B7	1³/₈"-8UNx270 ②
61	COMPANION FLANGE	A105	ASME B16.5 600LB 14" WN-RF
50	INSULATION	URETHANE BLOCK	REMARKS 4 ②
49	INSULATION	URETHANE BLOCK	REMARKS 4 ②
48	NAME PLATE BRACKET	SB-209 5083-O	T 4
47	P A D	SB-221 5083-H112	T 4
46	LIFTING LUG	SB-209 5083-O	T25
45	P A D	SB-209 5083-O	T20
44	P A D	SB-209 5083-O	T30
43	R I B	SB-209 5083-O	T10
42	SUPPORT	SB-209 5083-O	T20
41	SUPPORT	SB-221 5083-H112	C250x90x11x14.5
38	REINFORCEMENT PLATE	SB-209 5083-O	T10 ①
37	FLANGE	SB-247 6061-T6	ASME B16.5 300LB 10" WN-RF
36	FLANGE	SB-247 6061-T6	ASME B16.5 300LB 8" WN-RF
35	FLANGE	SB-247 6061-T6	ASME B16.5 300LB 18" WN-RF
34	FLANGE	SB-247 6061-T6	ASME B16.5 600LB 12" WN-RF
33	FLANGE	SB-247 6081-T6	ASME B16.5 600LB 14" WN-RF
32	NOZZLE	SB-241 5083-O	10"xSch80
31	NOZZLE	SB-241 5083-O	8"xSch40
30	NOZZLE	SB-209 5083-O	16"x T15
29	NOZZLE	SB-241 5083-O	12"xSch120
28	NOZZLE	SB-241 5083-O	14"xSch120
27	BACKING STRIP	SB-221 5083-H112	T4
26	HEADER FLAT PLATE	SB-209 5083-O	T35
25	HEADER FLAT PLATE	SB-209 5083-O	T25
24	HEADER	SB-209 5083-O	T15
23	HEADER	SB-209 5083-O	T10
22	HEADER	SB-209 5083-O	T20
21	HEADER	SB-209 5083-O	T45
11	SIDE PLATE	SB-209 3003-O	T5
10	SEPARATE PLATE	SB-209 3003-H14+ SFA-5.8 BAl Si-7	VPS2009C
9	SIDE BAR	SB-221 3003-H112	V1SB64W18
8	SIDE BAR	SB-221 3003-H112	V1SB64W36
7	SIDE BAR	SB-221 3003-H112	V1SB47W36
6	F I N	SB-209 3003-O	64PF42070E
5	F I N	SB-209 3003-O	64ST42070
4	F I N	SB-209 3003-O	47ST14050
3	F I N	SB-209 3003-O	64SR13030
2	F I N	SB-209 3003-O	64PF14030A
1	F I N	SB-209 3003-O	47SR14050

MATERIAL LIST

NR-13 CLASSIFICATION		CLASS A, CATEGORY Ⅱ		
INSULATION THICK (mm)		~~130~~ 153 ②		
NOZZLE SIZE	OUT	12"xSch120	16"x T15	10"xSch80
	IN	14"xSch120	16"x T15	8"xSch40
FIN TYPE		47SR14050	64PF14030A	64SR13030
NO. OF PASSAGE		148	74	74
FREE FLOW AREA	m²	0.3708	0.3291	0.3222
RADIO GRAPH (BUTT WELD)		100%		
OPER. WEIGHT	kg	10300		
EMPTY WEIGHT	kg	9400		
CORR. ALLOW	mm	0		
AIR LEAKAGE TEST PRESS.	kg/cm²G	82.0	29.0	29.0
PNEUM. TEST PRESS.	kg/cm²G	—	—	—
HYDR. TEST PRESS.	kg/cm²G	106.6	37.7	37.7
DESIGN TEMP. (REMARKS 2.)	°C	-46~+65	-65~+65	-51~+65
DESIGN PRESS. (REMARKS 3.)	kg/cm²G	82.0	29.0	29.0
FLUID		NATURAL GAS	DRY GAS	HYDROCARBONS
STREAM		A (11)	B (27)	C (38)
CODE		ASME SECTION Ⅷ Div.1 1998 EDITION 1999 ADDENDA WITH NATIONAL BOARD REGISTRATION CODE STAMP:NO		

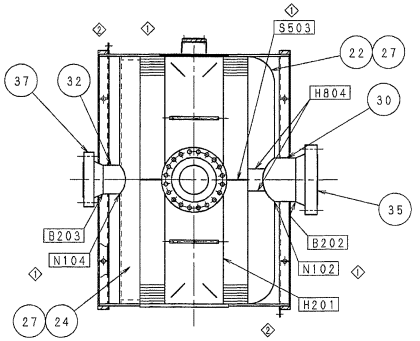

P. N.

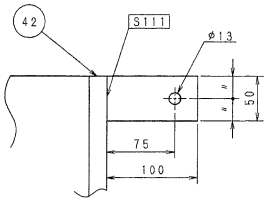

② DETAIL OF EARTH LUG

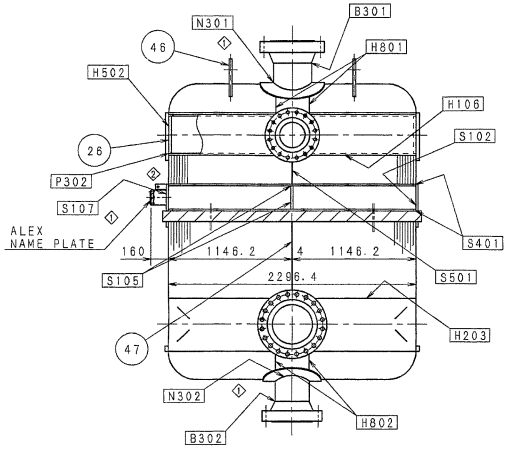

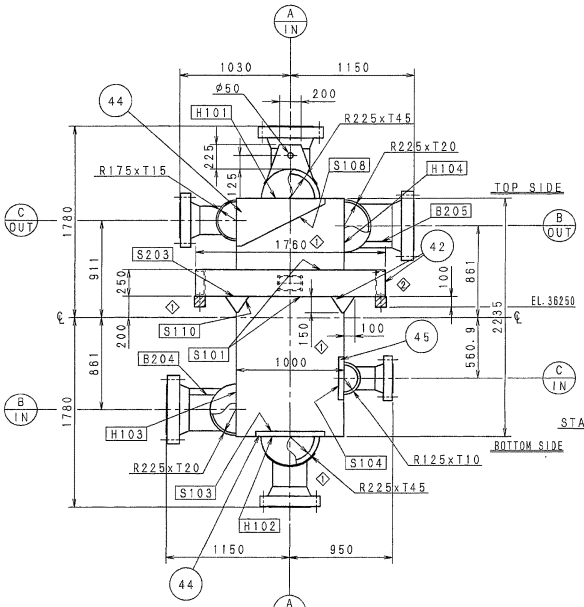

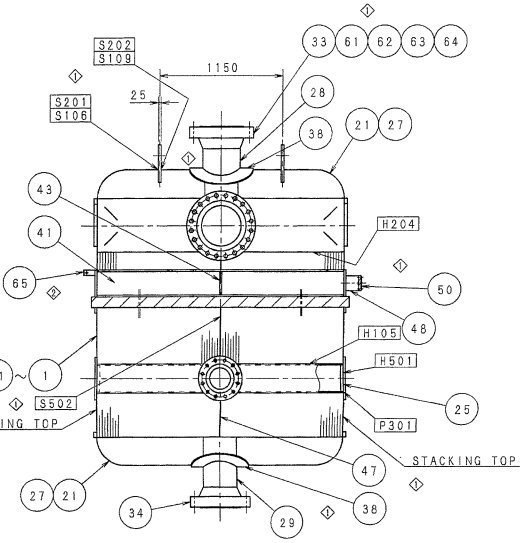

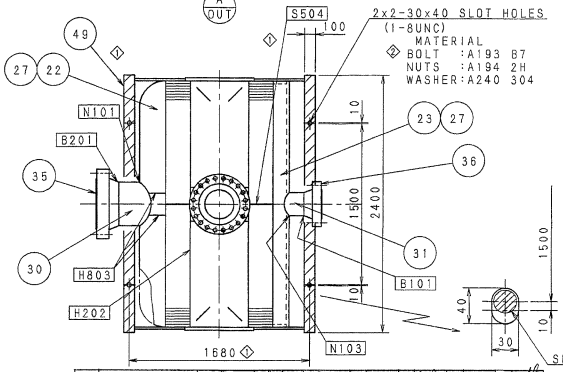

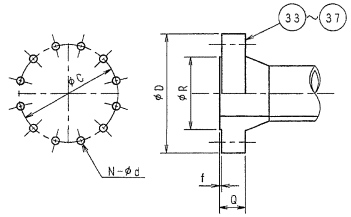

STREAM	PART NO.	φD	φR	Q	f	φC	N-φd
A IN	33	603.3	412.8	108.4	6.4	527.1	20-φ38.1
A OUT	34	558.8	361.0	104.4	6.4	489.0	20-φ35.1
B IN	35	647.7	469.9	① 88.6 ~~120.8~~	1.6	571.5	20-φ35.1
B OUT							
C IN	36	381.0	269.7	98.6	1.6	330.2	12-φ25.4
C OUT	37	444.5	323.9	77.6	1.6	387.4	16-φ28.4

DETAIL OF FLANGE DIMENSION

CGP PROJECT
V APPROVED
APPROVED AS NOTED
NOT APPROVED
REVIEWED
NOT BE RETURNED
Outgoing Date :
ORIG ITEM PM
Recerved Date : 4.JUL.2000
TOYO ENGINEERING CORP.

FINAL

REV.	DESCRIPTION	DSGN	CHK	APROV.	PM	ISSUE	DATE
⑤	REVISED PURCHASER'S DWG. NO.	23 OCT 2000 M.Odawara	9.1.0	30 OCT 2000 T.Otake	—	5/11 T.Otake	
④	REVISED	4 DEC 2000 M.Odawara	9.1.0	12/4 T.Otake	13/4 T.Otake	—	5/11 T.Otake
③	REVISED	15 JAN 2000 M.Odawara	9.1.0	11/4 T.Otake	11/4 T.Otake	—	11/4 T.Otake
②	REVISED	24 OCT 2000 M.Odawara	9.1.0	10/4 T.Otake	10/4 T.Otake	—	10/5 T.Otake
①	REVISED	5. SEP 2000 H. ODAWARA	5/5 H. ODAWARA	5/5 H. ODAWARA	5/5 S. OKAMOTO	—	5/5 M. GOTO	—	5/5 T. OTAKE
		4. JUL 2000 H. ODAWARA	1/4 H. ODAWARA	1/4 H. ODAWARA	1/4 S. OKAMOTO	—	1/4 S. NATANI	—	1/4 T. OTAKE
REV. NO.	REVISION NOTE	DRAWN	DESIGNED	CHECKED	APPROVED		APPROVED		
		ENGINEERING DEPARTMENT					QA DEPARTMENT		

SEQ NO.	COMPO. DWG. NO	T. NO.	ITEM	PART NAME	MATERIAL	QUA -NTY	SPA -RE	kg CAL'D MASS /PIECE	REQ -UI-	REMARKS	TEST PIE CE
	PART CODE										

CAREER

NAME

CGP PROJECT
P-20605 3rd GASxGAS EXCHANGER
ASSEMBLY DRAWING

KOBELCO — KOBE STEEL, LTD. ENGINEERING & MACHINERY DIVISION ENGINEERING DEPARTMENT

DWG. NO. AX2095 REV. ⑤

SCALE	SECT. CODE	SUB ASSY. INDEX	OUT PUT	Q. NO.	T. NO.
1/25	73C			99-66814-C	1-498814

MF 3rd 0012.06 MF 2nd 0011.15 MF 1st 0014.26