3RD ANGLE PROJECTION

THE DRAWING(S) AND THE INFORMATION CONTAINED HEREIN ARE THE PROPERTY OF KOBE STEEL, LTD. THEY SHALL NOT BE DISCLOSED, REPRODUCED OR USED IN ANY MANNER WITHOUT PRIOR WRITTEN CONSENT OF KOBE STEEL, LTD.

| COMMERCIAL TOLERANCE MACHINING | | |
|---|---|---|
| DIVISION OF DIM. | | MEDIUM |
| ≤ | 6 | ±0.1 |
| > 6 ≤ | 30 | ±0.2 |
| > 30 ≤ | 120 | ±0.3 |
| > 120 ≤ | 315 | ±0.5 |
| > 315 ≤ | 1000 | ±0.8 |
| > 1000 ≤ | 2000 | ±1.2 |

REMARKS
1. MARKING OF "○" AND "□" SHOW PART NO. AND WELDED JOINT NO. RESPECTIVELY.
2. -87°C AND -90°C ARE MINIMUM DESIGN METAL TEMPERATURE PER ASME SEC. Ⅷ Div.1.
3. DESIGN PRESSURE MEANS MAXIMUM ALLOWABLE WORKING PRESSURE PER ASME SEC. Ⅷ Div. 1.
4. REFER TO ... DETAIL DOC. NO. 1-ET-4150.50-1230-940-KSL-023
5. PNEUMATIC TEST FOR THE PIPING OF B IN STREAM IS PERFORMED AFTER COMPLETIONOF PIPING FABRICATION IN ACCORDANCE WITH ANSI B31.3 PAR. 345.5. THE TEST PRESSURE IS 31.9kg/cm²G.

| ITEM | PART NAME | MATERIAL | REMARKS |
|---|---|---|---|
| 52 | EARTH LUG | SB-209 5083-O | T 6 |
| 51 | INSULATION | URETHANE BLOCK | REMARKS 4 |
| 50 | INSULATION | URETHANE BLOCK | REMARKS 4 |
| 49 | NAME PLATE BRACKET | SB-209 5083-O | T 4 |
| 48 | LIFTING LUG | SB-209 5083-O | T10 |
| 47 | LIFTING LUG | SB-209 5083-O | T20 |
| 46 | LIFTING LUG | SB-221 5083-H112 | C200x90x10x15.5 |
| 45 | R I B | SB-209 5083-O | T10 |
| 44 | P A D | SB-209 5083-O | T10 |
| 43 | P A D | SB-209 5083-O | T15 |
| 42 | SUPPORT | SB-209 5083-O | T20 |
| 41 | SUPPORT | SB-221 5083-H112 | C200x90x10x15.5 |
| | | | |
| 38 | 90° LONG ELBOW | WP5083W-O ② | 2"xSch80 |
| 37 | 90° LONG ELBOW | WP5083W-O ② | 6"xSch40 |
| 36 | BOSS | SB-221 5083-O | |
| 35 | C A P | SB-209 5083-O | 10"xSch80 |
| 34 | SEPARATER | SB-241 5083-O | 10"xSch80 |
| 33 | FLANGE | SB-247 6061-T6 | ASME B16.5 300LB 1½" WN-RF |
| 32 | FLANGE | SB-247 6061-T6 | ASME B16.5 300LB 8" WN-RF |
| 31 | FLANGE | SB-247 6061-T6 | ASME B16.5 300LB 6" WN-RF |
| 30 | FLANGE | SB-247 6061-T6 | ASME B16.5 600LB 8" WN-RF |
| 29 | NOZZLE | SB-241 5083-O | 2"xSch80 |
| 28 | NOZZLE | SB-241 5083-O | 8"xSch40 |
| 27 | NOZZLE | SB-241 5083-O | 6"xSch40 |
| 26 | NOZZLE | SB-241 5083-O | 8"xSch120 |
| 25 | BACKING STRIP | SB-221 5083-H112 | T4 |
| 24 | HEADER FLAT PLATE | SB-209 5083-O | T20 |
| 23 | HEADER | SB-209 5083-O | T15 |
| 22 | HEADER | SB-221 5083-O | T 9 |
| 21 | HEADER | SB-209 5083-O | T35 |
| | | | |
| 14 | SIDE PLATE | SB-209 3003-O | T5 |
| 13 | SEPARATE PLATE | SB-209 3003-H14+ SFA-5.8 BAl Si-7 | VPS2009C |
| 12 | SEPARATE PLATE | SB-209 3003-H14+ SFA-5.8 BAl Si-7 | VPS1608C |
| 11 | SIDE BAR | SB-221 3003-H112 | V1SB64W36 |
| 10 | SIDE BAR | SB-221 3003-H112 | V1SB32W36 |
| 9 | SIDE BAR | SB-221 3003-H112 | V1SB95W36 |
| 8 | SIDE BAR | SB-221 3003-H112 | V1SB47W36 |
| 7 | F I N | SB-209 3003-O | 64PF42070E |
| 6 | F I N | SB-209 3003-O | 64ST42070 |
| 5 | F I N | SB-209 3003-O | 32ST14050 |
| 4 | F I N | SB-209 3003-O | 95ST42070 |
| 3 | F I N | SB-209 3003-O | 47ST14050 |
| 2 | F I N | SB-209 3003-O | 95SR17030 |
| 1 | F I N | SB-209 3003-O | 47SR14050 |

MATERIAL LIST

| | | | |
|---|---|---|---|
| NR-13 CLASSIFICATION | | CLASS A, CATEGORY Ⅲ | ④ |
| INSULATION TH'K (mm) | | ~~178~~ 204 ⑤ | ① |
| NOZZLE SIZE | OUT | 8"xSch120 | 8"xSch40 |
| | IN | 8"xSch120 | 6"xSch40 |
| FIN TYPE | | 47SR14050 | 95SR17030 |
| NO. OF PASSAGE | | 53 | 54 |
| FREE FLOW AREA m² | | 0.1328 | 0.3797 |
| RADIO GRAPH (BUTT WELD) | | 100% | |
| OPER. WEIGHT kg | | 3100 | |
| EMPTY WEIGHT kg | | 2800 | |
| CORR. ALLOW mm | | 0 | |
| AIR LEAKAGE TEST PRESS. kg/cm²G | | 82.0 | 29.0 |
| PNEUM. TEST PRESS. kg/cm²G | | — | — |
| HYDR. TEST PRESS. kg/cm²G | | 106.6 | 37.7 |
| DESIGN TEMP. (REMARKS 2.) °C | | -87~+65 | -90~+65 |
| DESIGN PRESS. (REMARKS 3.) kg/cm²G | | 82.0 | 29.0 |
| FLUID | | HYDROCARBONS | HYDROCARBONS |
| STREAM | | A (14) | B (24) |
| CODE | | ASME SECTION Ⅷ Div.1 1998 EDITION 1999 ADDENDA WITH NATIONAL BOARD REGISTRATION CODE STAMP:NO | |

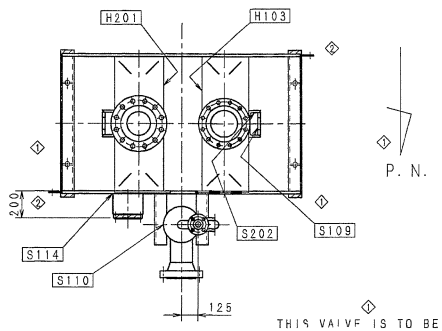


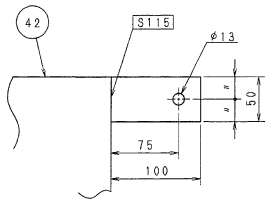


② DETAIL OF EARTH LUG

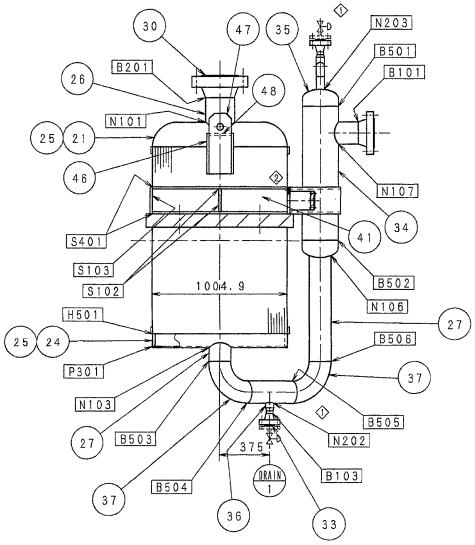


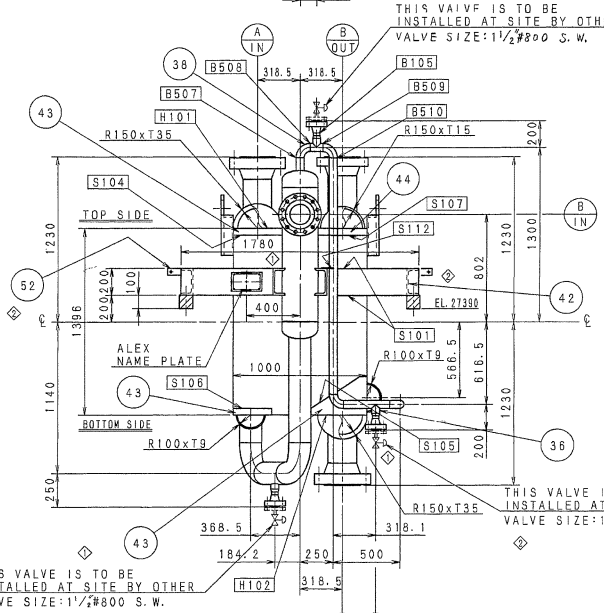


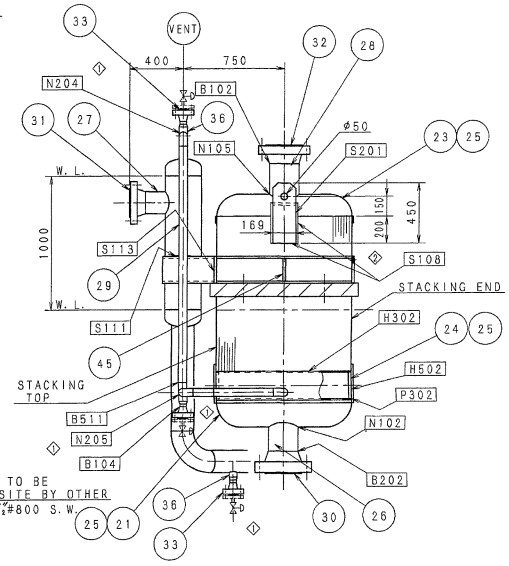


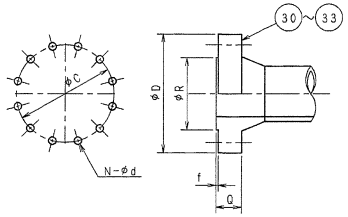


| STREAM | PART NO. | ϕD | ϕR | Q | f | ϕC | N-ϕd |
|---|---|---|---|---|---|---|---|
| A IN | 30 | 419.1 | 269.7 | 87.4 | 6.4 | 349.3 | 12-ϕ31.8 |
| A OUT | | | | | | | |
| B IN | 31 | 317.5 | 215.9 | 57.6 | 1.6 | 269.7 | 12-ϕ22.4 |
| B OUT | 32 | 381.0 | 269.7 | 68.6 | 1.6 | 330.2 | 12-ϕ25.4 |
| DRAIN | 33 | 155.4 | 73.2 | ◇32.6 ~~43.6~~ | 1.6 | 114.3 | 4-ϕ22.4 |
| VENT | | | | | | | |

DETAIL OF FLANGE DIMENSION

2x2-30x40 SLOT HOLES (1-8UNC)
MATERIAL
② BOLT :A193 B7
NUTS :A194 2H
WASHER:A240 304

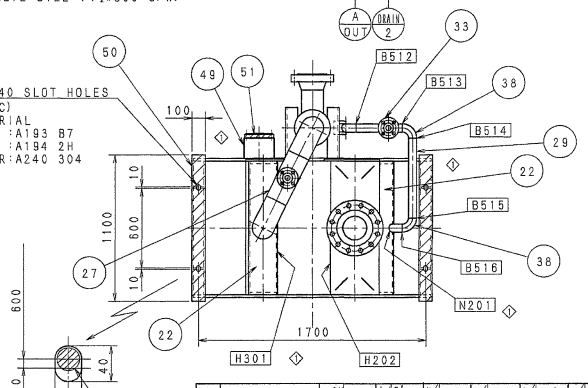


| CGP PROJECT | |
|---|---|
| V | APPROVED |
| | APPROVED AS NOTED |
| | NOT APPROVED |
| | REVIEWED |
| | NOT BE RETURNED |
| Outgoing Date : | |
| ORIG | DEM PM |
| Received Date : 14.DEC.00 | |
| TOYO ENGINEERING CORP | |

FINAL

| REV. | DESCRIPTION | DSGN | CHK | APROV. | PM | ISSUE | DATE |
|---|---|---|---|---|---|---|---|
| ⑤ | REVISED | 10.NOV 2000 Y.OKUMURA | 5/10 T.OKUMURA | 5/10 T.OKUMURA | — | 5/11 M.GOTO | — 5/11 |
| ④ | REVISED PURCHASER's DWG.NO. | 4.DEC 2000 Y.OKUMURA | 12/4 T.OKUMURA | 12/4 T.OKUMURA | — | 12/4 S.KATAYAMA | — 12/4 |
| ③ | REVISED | 15.NOV 2000 Y.OKUMURA | 11/4 T.OKUMURA | 11/4 T.OKUMURA | — | 11/5 S.KATAYAMA | — 11/4 |
| ② | REVISED | 26.OCT 2000 Y.OKUMURA | 10/4 T.OKUMURA | 10/4 T.OKUMURA | — | 10/5 S.KATAYAMA | — 10/5 |
| ① | REVISED | 5. SEP 2000 H. ODAWARA | 9/5 H. ODAWARA | 9/5 S. OKAMOTO | — | 9/5 M. GOTO | — 9/5 T. OTAKE |
| | | 4. JUL 2000 H. ODAWARA | 7/4 H. ODAWARA | 7/4 S. OKAMOTO | — | 7/4 S. NATANI | — 7/4 T. OTAKE |
| REV. NO. | REVISION NOTE | DRAWN | DESIGNED | CHECKED | APPROVED | APPROVED | |
| | | ENGINEERING DEPARTMENT | | | | QA DEPARTMENT | |

| MAR *K | SEQ NO. | COMPO. DWG. NO | T. NO. | ITEM | PART NAME | MATERIAL | QUA *K | SPA *K | kg CAL'G MASS /PIECE | PRO *CT | REMARKS | TEST PIC *C | TEST PR. *C |
|---|---|---|---|---|---|---|---|---|---|---|---|---|---|
| | | PART CODE | | | | | | | | | | | |

CAREER

| SCALE | SECT. CODE |
|---|---|
| 1/20 | 73C |

NAME: CGP PROJECT P-20606 LIQUIDxLIQUID EXCHANGER ASSEMBLY DRAWING

KOBELCO — KOBE STEEL, LTD. ENGINEERING & MACHINERY DIVISION ENGINEERING DEPARTMENT

DWG. NO. AX2096 REV ⑤

| SUB ASSY. INDEX | OUT PUT | D. NO. | T. NO. |
|---|---|---|---|
| | | 99-66814-D | 1-498815 |

| CONSORTIUM | CONTRACT: |
|---|---|
| Toyo / Snamprogetti / Setal / Toc / SII | TOYO N°: |
| TOYO WORK No. 8A-0491-52 — KENA WORK No. O-4480 | RESPONSIBLE: REG.CREA: |

PETROLEO BRASILEIRO S.A. PETROBRAS — SERVIÇO DE ENGENHARIA SEGEN

USER: TRANSPETRO/DTSE/GEMAC

JOB: CABIUNAS GAS PROCESSING AND TRANSFER PROJECT

UNIT: NGL RECOVERY (U-206)

TITLE: P-20606 LIQUID x LIQUID EXCHANGER ASSEMBLY DRAWING

| DESIGN BY | DRAWN BY | CHECK | APPROVAL |
|---|---|---|---|
| H.O | H.Odawara | S.Okamoto | S.Natani |
| SCALE 1 / 20 | DRAWING | | SHEET 1 of 1 |
| DATE 4.JUL.2000 | NP 1-DE-4150.50-1230-940-KSL-004 | | |

MF 3回 0012.06 MF 2回 0011.15 MF 1回 0010.26