3RD ANGLE PROJECTION

THE DRAWING(S) AND THE INFORMATION CONTAINED HEREIN ARE THE PROPERTY OF KOBE STEEL, LTD. THEY SHALL NOT BE DISCLOSED, REPRODUCED OR USED IN ANY MANNER WITHOUT PRIOR WRITTEN CONSENT OF KOBE STEEL, LTD.

GENERAL TOLERANCES BACHINING

| DIVISION OF DIM. | MEDIUM |
|---|---|
| 0.5 ≤ 6 | ±0.1 |
| 6 ≤ 30 | ±0.2 |
| 30 ≤ 120 | ±0.3 |
| 120 ≤ 315 | ±0.5 |
| 315 ≤ 1000 | ±0.8 |
| 1000 ≤ 2000 | ±1.2 |

REMARKS
1. MARKING OF "○" AND "□" SHOW PART NO. AND WELDED JOINT NO. RESPECTIVELY.
2. -94°C AND -98°C ARE MINIMUM DESIGN METAL TEMPERATURE PER ASME SEC. Ⅷ Div. 1.
3. DESIGN PRESSURE MEANS MAXIMUM ALLOWABLE WORKING PRESSURE PER ASME SEC. Ⅷ Div. 1.
4. REFER TO DETAIL DOC. NO. I-ET-4150.50-1230-940-KSL-023

| ITEM | PART NAME | MATERIAL | REMARKS |
|---|---|---|---|
| 49 | EARTH LUG | SB-209 5083-O | T 6 |
| 48 | INSULATION | URETHANE BLOCK | REMARKS 4 |
| 47 | INSULATION | URETHANE BLOCK | REMARKS 4 |
| 46 | NAME PLATE BRACKET | SB-209 5083-O | T 4 |
| 45 | LIFTING LUG | SB-209 5083-O | ~~T20~~ T25 |
| 44 | R I B | SB-209 5083-O | T10 |
| 43 | P A D | SB-209 5083-O | T25 |
| 42 | SUPPORT | SB-209 5083-O | ~~T15~~ ~~T25~~ T15 |
| 41 | SUPPORT | SB-221 5083-H112 | C150x90x9x14 |
| 29 | FLANGE | SB-247 6061-T6 | ASME B16.5 300LB 18" WN-RF |
| 28 | FLANGE | SB-247 6061-T6 | ASME B16.5 300LB 14" WN-RF |
| 27 | FLANGE | SB-247 6061-T6 | ASME B16.5 600LB 6" WN-RF |
| 26 | NOZZLE | SB-209 5083-O | 16"x T15 |
| 25 | NOZZLE | SB-241 5083-O | 14"xSch80 |
| 24 | NOZZLE | SB-241 5083-O | 6"xSch120 |
| 23 | BACKING STRIP | SB-221 5083-H112 | T4 |
| 22 | HEADER | SB-209 5083-O | T30 |
| 21 | HEADER | SB-209 5083-O | T20 |
| 9 | SIDE PLATE | SB-209 3003-O | T5 |
| 8 | SEPARATE PLATE | SB-209 3003-H14+ SFA-5.8 BAl Si-T | VPS2009C |
| 7 | SIDE BAR | SB-221 3003-H112 | V1SB64W36 |
| 6 | SIDE BAR | SB-221 3003-H112 | V1SB47W36 |
| 5 | F I N | SB-209 3003-O | 64PF42070E |
| 4 | F I N | SB-209 3003-O | 64ST42070 |
| 3 | F I N | SB-209 3003-O | 47ST14050 |
| 2 | F I N | SB-209 3003-O | 64PF14030A |
| 1 | F I N | SB-209 3003-O | 47SR14050 |

MATERIAL LIST

| | | | |
|---|---|---|---|
| NR-13 CLASSIFICATION | | CLASS A, CATEGORY Ⅲ | |
| INSULATION TH'K (mm) | | ~~180~~ 216 | |
| NOZZLE SIZE | OUT | 6"xSch120 | 16"x T15 |
| | IN | 6"xSch120 | 14"xSch80 |
| FIN TYPE | | 47SR14050 | 64PF14030A |
| NO. OF PASSAGE | | 55 | 56 |
| FREE FLOW AREA | m² | 0.1022 | 0.1847 |
| RADIO GRAPH (BUTT WELD) | | 100% | |
| OPER. WEIGHT | kg | 2600 | |
| EMPTY WEIGHT | kg | 2500 | |
| CORR. ALLOW | mm | 0 | |
| AIR LEAKAGE TEST PRESS. | kg/cm²G | 82.0 | 29.0 |
| PNEUM. TEST PRESS. | kg/cm²G | —— | —— |
| HYDR. TEST PRESS. | kg/cm²G | 106.6 | 37.7 |
| DESIGN TEMP. (REMARKS 2.) | °C | -94~+65 | -98~+65 |
| DESIGN PRESS. (REMARKS 3.) | kg/cm²G | 82.0 | 29.0 |
| FLUID | | NATURAL GAS | DRY GAS |
| STREAM | | A (17) | B (26) |
| CODE | | ASME SECTION Ⅷ Div. 1 1998 EDITION 1999 ADDENDA WITH NATIONAL BOARD REGISTRATION CODE STAMP:NO | |

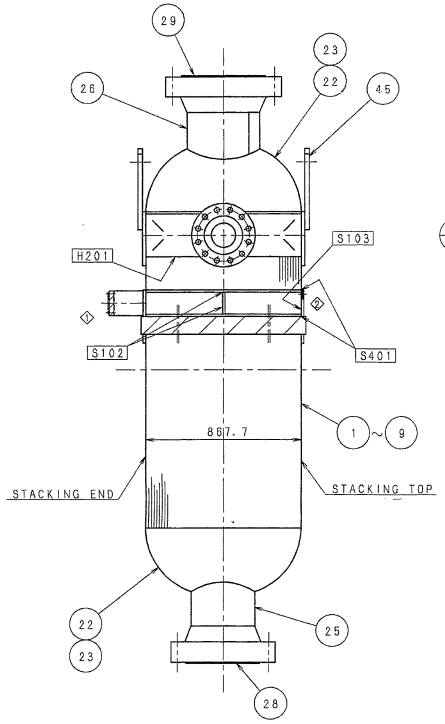


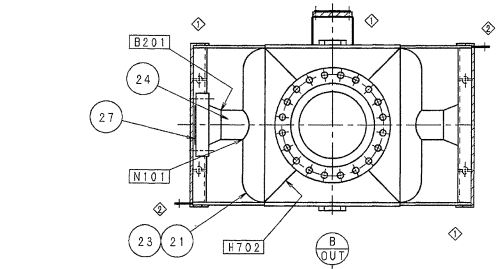


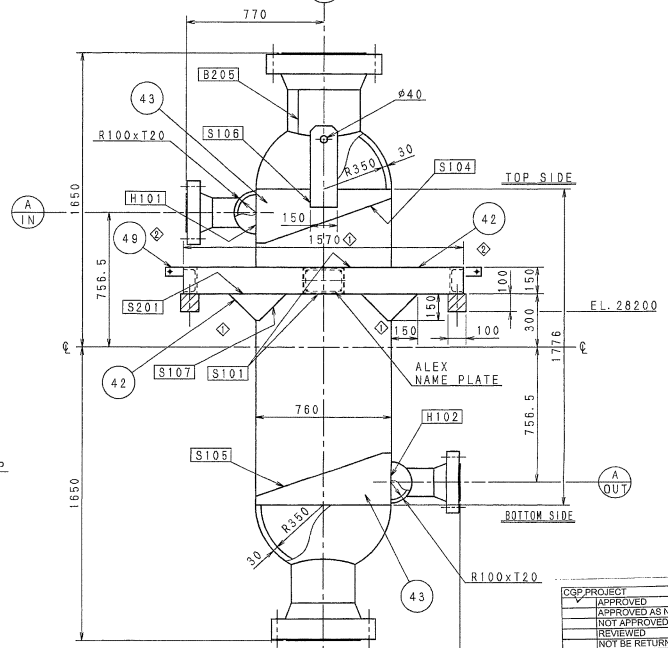


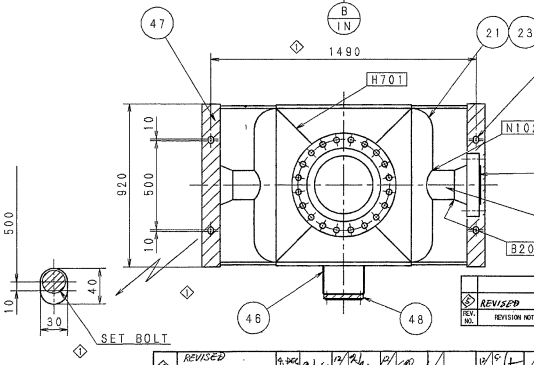


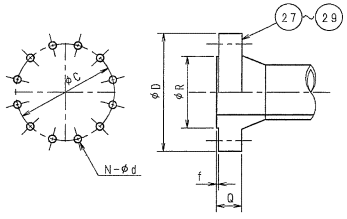


| STREAM | PART NO. | φD | φR | Q | f | φC | N-φd |
|---|---|---|---|---|---|---|---|
| A IN | 27 | 355.6 | 215.9 | 76.4 | 6.4 | 292.1 | 12-φ28.4 |
| A OUT | | | | | | | |
| B IN | 28 | 584.2 | 412.8 | ~~83.6~~ ~~110.6~~ | 1.6 | 514.4 | 20-φ31.6 |
| B OUT | 29 | 647.7 | 469.9 | ~~88.9~~ ~~116.6~~ | 1.6 | 571.5 | 20-φ35.1 |

DETAIL OF FLANGE DIMENSION

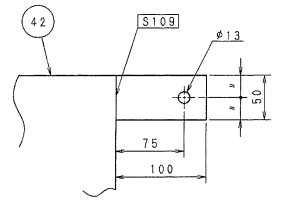


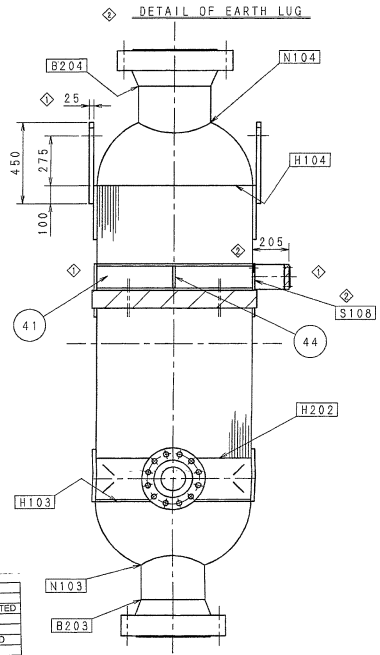


CGP PROJECT
APPROVED
APPROVED AS NOTED
NOT APPROVED
REVIEWED
NOT BE RETURNED
Outgoing Date : 14.DEC.00
ORIG DEJI PM
Received Date : 14.DEC.00
TOYO ENGINEERING CORP.

FINAL

| REV. | DESCRIPTION | DSGN | CHK | APROV | PM | ISSUE | DATE |
|---|---|---|---|---|---|---|---|
| 5 | REVISED | | | | | | 5/6 21 6 |
| 4 | REVISED | | | | | | 24.OCT.2000 |
| 3 | REVISED | | | | | | 5.SEP.2000 |
| 2 | REVISED | | | | | | 4.JUL.2000 |
| 1 | REVISED | | | | | | 21.JUN.2000 |

THIS DOCUMENT IS THE PROPERTY OF PETROBRAS AND IT IS PROTECTED IN ACCORDANCE WITH PREVAILING LAW. IT SHALL ONLY BE USED FOR THE PURPOSE IT IS DELIVERED.

CONSORTIUM: Toyo / Toc / SII — Setal Engenharia e Construções — Setal Work No. O-4480 — Toyo Work No. BA-0491-52

CONTRACT:
TOYO Nº:
RESPONSIBLE/REG.CREA:

PETROLEO BRASILEIRO S.A. PETROBRAS — SERVIÇO DE ENGENHARIA SEGEN

USER: TRANSPETRO/DTSE/GEMAC
JOB: CABIUNAS GAS PROCESSING AND TRANSFER PROJECT
UNIT: NGL RECOVERY (U-206)
TITLE: P-20607 DEETHANIZER CONDENSER ASSEMBLY DRAWING

| DESIGN BY | DRAWN BY | CHECK | APPROVAL |
|---|---|---|---|
| H.O | H.Odawara | S.Okamoto | S.Natani |

SCALE 1/15 — DRAWING — SHEET 1 of 1
DATE 4.JUL.2000 — Nº I-DE-4150.50-1230-940-KSL-005

| REV. NO. | REVISION NOTE | DRAWN | DESIGNED | CHECKED | APPROVED | APPROVED |
|---|---|---|---|---|---|---|
| 5 | REVISED PURCHASER'S DWG. No. | 9.DEC 2000 | 21/6 12/4 | | | 15/4 |
| 4 | REVISED | 4.DEC 2000 | 7/6 11/4 | | | 11/4 |
| 3 | REVISED | 24.OCT 2000 | 21/6 17/4 | | | 19/4 |
| 2 | REVISED | 5.SEP 2000 | H. ODAWARA 9/4 | S. IKENOTO 9/4 | S. NATANI 9/4 | T. OTAKE 9/4 |
| 1 | REVISED | 4.JUL 2000 | H. ODAWARA 7/4 | S. IKENOTO 7/4 | S. NATANI 7/4 | T. OTAKE 7/4 |

ENGINEERING DEPARTMENT — QA DEPARTMENT

| SEQ NO. | COMPO. DWG. NO | T. NO. | ITEM | PART NAME | MATERIAL | DIA. mm | DIA. inch | kg CAL'D MASS/PIECE | REQ. Q'TY. | REMARKS | TEST PR. | TEST PIE |
|---|---|---|---|---|---|---|---|---|---|---|---|---|
| | PART CODE | | | | | | | | | | | |

CAREER

NAME: CGP PROJECT P-20607 DEETHANIZER CONDENSER ASSEMBLY DRAWING

KOBELCO — KOBE STEEL, LTD. ENGINEERING & MACHINERY DIVISION ENGINEERING DEPARTMENT

DWG. NO. AX2097 — REV. 5

| SCALE | SECT · CODE | SUB ASSY. INDEX | OUT PUT | O. NO. | T. NO. |
|---|---|---|---|---|---|
| 1/15 | 73C | | | 99-66814-E | I-498816 |

MF 3 0012.06 MF 2 0011.15 MF 1 0010.26