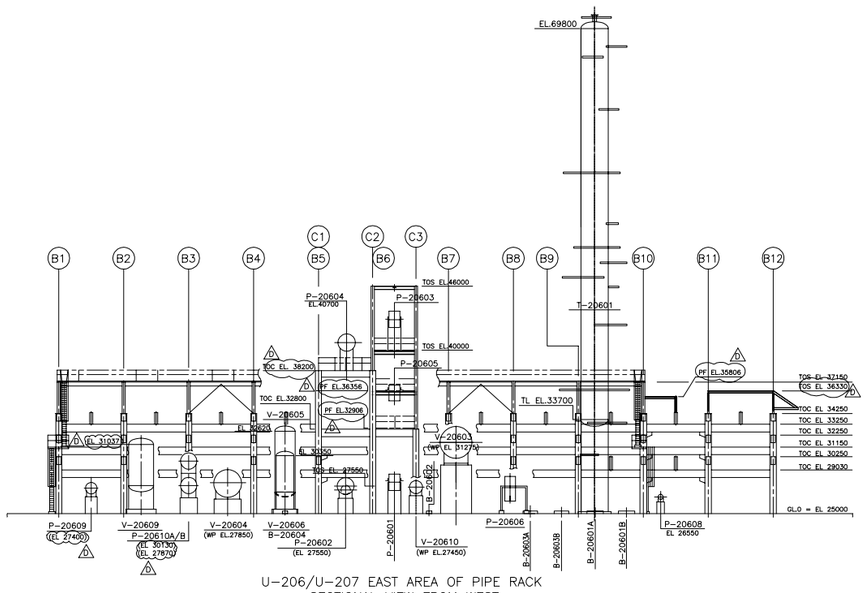

U-206/U-207 EAST AREA OF PIPE RACK
SECTIONAL VIEW FROM WEST

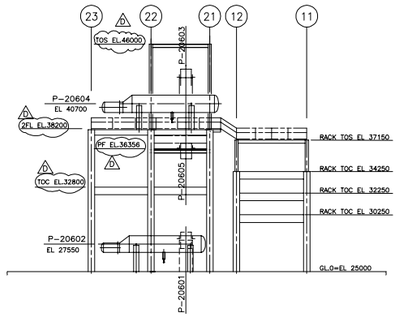

U-206 STRUCTURE I / U-207 STRUCTURE II
SECTIONAL VIEW FROM NORTH

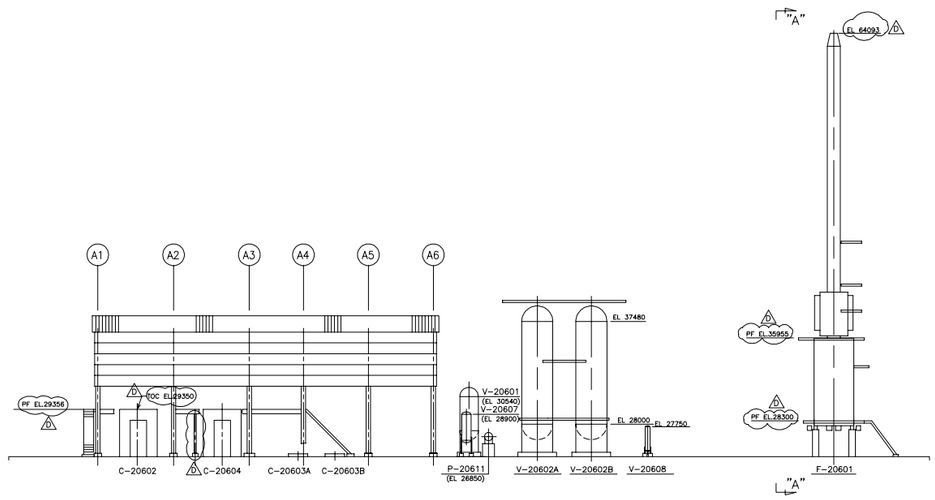

U-206/U-207 WEST AREA OF PIPE RACK
SECTIONAL VIEW FROM WEST

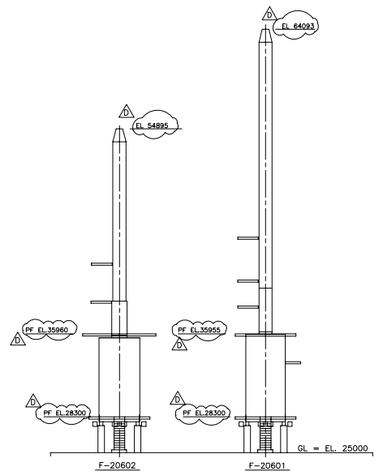

VIEW "A"-"A"

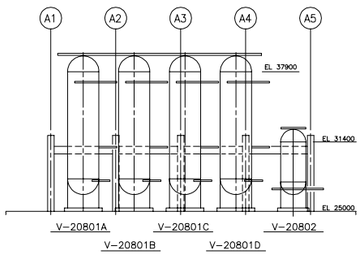

U-208 WEST AREA OF PIPE RACK
SECTIONAL VIEW FROM WEST

SCALE 1:200

0 5 10 15 20 25

REFERENCE DOCUMENTS

GENERAL NOTES

1 – DESIGN ELEVATION (OR GRADE) : EL 25,000

AS BUILT

REV.	DESCRIPTION	DWN	DSGN	CHK	APROV	PM	ISSUE	DATE
C	AS BUILT	S.M	H.S	S.H	M.K		Y.N	AUG/15/'02
B	APPROVED FOR CONSTRUCTION	S.M	H.S	S.H	M.K		Y.N	JAN/15/'01
A	APPROVED FOR DESIGN	S.M	H.S	S.H	M.K		Y.N	JUL/31/'00
0	FOR APPROVAL	S.K	M.K	M.K	H.M	Y.W	Y.N	03/31/'00

THIS DOCUMENT IS THE PROPERTY OF PETROBRAS AND IT IS PROTECTED IN ACCORDANCE WITH PREVAILING LAW. IT SHALL ONLY BE USED FOR THE PURPOSE IT IS DELIVERED.

CONSORTIUM
Toyo Tec / SIT
Setal Engineering
TOYO ENGR. No. 3M-0491-03
SETAL ENGR. No. O-4480

CONTRACT: 858.2.010.97-6
TOYO Nº:
RESPONSIBLE:
REG.CREA:

PETROLEO BRASILEIRO S.A.
PETROBRAS

SERVIÇO DE ENGENHARIA SEGEN

USER: ABAST-LOG/DTSE-GEMAC

JOB: CABIUNAS GAS PROCESSING AND TRANSFER PROJECT

UNIT: NGL RECOVERY(U-206, U-207, U-208)

TITLE: GENERAL ARRANGEMENT
NGL RECOVERY UNIT

DESIGN BY	DRAWN BY	CHECK	APPROVAL
H.S	S.M	S.H	M.K

SCALE 1 : 200
SHEET 1 of 1
DATE AUG/15/'02
Nº I-DE-4150.50-1230-942-TOC-002

AUTOCAD R14 I-DE-4150_50-1230-942-TOC-002BC